DNX-1u Access Gateway User's Guide

DNX-1u Software Release 4.0

Inside...

- Installation and Initial Configuration
- System-Level Configuration
- Subsystem Configuration
- Configuring OSPF, Reverse Telnet, and Rapid Trunk Conditioning
- Comprehensive List of CLI Commands and Modes

DOC-001-02801
Revision 011
July 2011

Notice

Revision 011 of the *DNX-1u Access Gateway User's Guide* is written to specifications using **System Release 4.0 Software**. The following changes were made to this document as part of Revision 011.

- Update the Section 1, Table 1-3.

CAUTION

Release 1.1 Boot Image software MUST be loaded prior to upgrading system software to Release 3.1 or greater.

Note: *Release 4.0 is interoperable with the existing DNX-1u R3.0 and above software and DNX-11/88 R16.x and above software. In addition, this release is compatible with ENvision Plus Release 1.3 or later.*

Previous Release History

System Release 4.0 Software. Revision 010 of the *User's Guide* included the following change:

- Update the Appendix A.

System Release 4.0 Software. Revision 009 of the *User's Guide* included the following change:

- Update the Appendix A.

System Release 4.0 Software. Revision 008 of the *User's Guide* included the following new features:

- Added default settings for *Disable TX FIFO* and *Disable Clock Edge Errors*.

System Release 4.0 Software. Revision 007 of the *User's Guide* included the following new features:

- Software merges from previous software releases and feature pack enhancements for product interoperability and backward compatibility.
- Rebranded from Eastern Research to Sycamore Networks.

System Release 3.4 FP3 Software. Revision 006 of the *User's Guide* included the following new features:

- Open Shortest Path First (OSPF) routing over both Point-to-Point Protocol (PPP) and Frame Relay Wide Area Network (WAN) links. The DNX-1u supports a combination of OSPF on WAN interfaces and Routing Internet Protocol (RIP) on local interfaces. OSPF is capable of performing as a designated router to provide Link State Advertisement (LSA) flooding for all other routers on the broadcast network. This feature is enabled using the Advanced Routing Software Feature Option Key.
- Reverse Telnet allows you to assign a unique IP address to a Terminal Server port that corresponds to the configured Transmission Control Protocol (TCP) port number for that port. It allows RS-232 console (Telnet) access to a Network Element (NE) connected to a DNX-1u Terminal Server port by simply specifying the IP address of the port (device) to initiate the session.
- 24/32 DS0 Clear T1/E1 Routing allows the DNX-1u to operate in applications that primarily require compatibility with un-channelized (clear) T1/E1 routers located at the head-end of the network. It enables up to 14 PPP, PPP Multi-Link (PPP-MLP) or High-Level Data Link Control (HDLC) encapsulated WAN channels to be mapped to up to 24 T1 or 32 E1 timeslots per system.

System Release 3.5 FP1/3.5 FP2 Software. Revision 005 of the *User's Guide* included the following new features:

- Rapid Trunk Conditioning (RTC) for T1/E1 channels is configured on a DS0 basis; however, it can be enabled/disabled on a link-by-link basis for both voice and data. When enabled, RTC immediately applies an initial signalling and payload pattern within 30 milliseconds upon link failure detection, instead of the standard 2.5 seconds specified by Telcordia. The DNX-1u can assign from 1 to 16 different DS0-level Trunk Conditioning Profiles independently to 64K connections.

  Rapid Trunk Conditioning can be configured locally from the Embedded Menus or remotely using Telnet or Simple Network Management Protocol (SNMP).
- Enhanced TACACS+ "AAA" (Authentication, Authorization & Accounting) client provides secure, centralized username/password management of DNX-1u remote nodes. It is enabled/disabled using the Enhanced Management Software Feature Option Key.

System Release 3.4 FP2 Software. Revision 004 of the *User's Guide* included new Router Command Line Interface (CLI) commands:

- **access-list** was replaced with the Global Configuration Mode **ip nat** command, which allows users to change Network Address Translation (NAT) entries automatically and configures a number of NAT entries based on user-defined address ranges.
- **rip** replaced the **ip gdp rip** command. It enables the Routing Interface Protocol (RIP) for the currently selected logical port.
- Entering a partial command on the CLI and then pressing the **Tab** key will display the rest of the command.
- New Router CLI Commands:
  - Privileged EXEC Mode:
    - **disable** takes the user from Privileged EXEC Mode to User EXEC Mode.
  - Privileged EXEC and Global Configuration Modes:
    - **show arp** displays the contents of the ARP table.
    - **show ip route** displays the contents of the Route table.
    - **show ip route config** displays the configured routes in the Route table.
    - **show log** displays the history of events for the system.
    - **show version** displays the current software release information running on the system.
  - Global Configuration Mode:
    - **portid <string>** provides additional information about selected DNX-1u interfaces. In addition, it allows users to associate a name **string** with each interface for customer tracking purposes.
  - Interface Configuration Mode:
    - **addr** assigns an Internet Protocol (IP) address to the logical port and allows you to configure the logical IP interface.
    - **mask** assigns an IP mask to the logical port and allows you to configure the logical IP interface.
    - **type** assigns a Wide Area Network (WAN) port to the logical port.
    - **ip** assigns an IP address to the logical port.
    - **remote** assigns a remote IP address to the logical port.

System Release 3.4 Software. Revision 003 of the *User's Guide* included the following new features:

- Command Line Interface (CLI - Flat File) Management for Router Subsystem backup, diagnostics and configuration purposes.
- Configuration option to suppress lower level TRAPS on T1/E1 links while in Red Alarm state.
- Wildcards for X.25 Over TCP/IP (XOT) X.121 local and remote addresses.
- XOT Local Channel Number (LCN) allocations for High Speed Synchronous Data (HSSD) ports.
- XOT zero length calling address
- Asynchronous Port enhancements

System Release 3.3 Software, Revision 002 of the *User's Guide* included the following new features:

- Special instructions for Link Alert Monitoring and configuring Link Alert Profiles in Automatic Protection Switching (APS) and Enhanced T1/Channel Service Unit (CSU) modes of operation
- Minor changes to XOT-related screens and fields
- Option to preserve system IP addresses during a Configuration Database Restore
- Addition of information on deactivating High Availability Circuit (HAC), Automatic Protection Switching (APS) or T1/Channel Service Unit (CSU) keys

System Release 3.3 Software, Revision 001 of the *User's Guide* included the following new features:

- X.25 over Transmission Control Protocol/Internet Protocol (TCP/IP) (XOT) configuration and functionality
- Enhanced username/password management and security - Terminal Access Controller Access Control System (TACACS+) client
- Channel configuration for 8 kbps and 16 kbps XOT for high-speed synchronous ports
- Exposure of Link Access Procedure
- Balanced Link Access Procedure Balance (LAPB) interface
- Enhanced T1/Channel Service Unit (CSU) system (Release 3.5 FP1 only)

System Release 3.2 Software included the following features:

- Support for ENvision Plus Network Management System (NMS)

System Release 3.1 Software included the following features:

- 1:1 Automatic Protection Switching for T1/E1 links
- New Boot Image Release 1.1 software

Foreword

Guide Summary

This User's Guide is provided to facilitate the installation and operation of the Sycamore Networks DNX-1u Access Gateway family of products. As part of a two-volume set that includes the *DNX-1u Reference Guide* (DOC-001-02811) and is designed to provide procedures for using the embedded menu system to manage the DNX-1u using a local terminal console or Telnet session. Procedures for managing the DNX-1u using the Sycamore Networks ENvision Plus Network Management System are covered in the *ENvision Plus User's Guide* (DOC-001-00014).

This material is targeted for qualified telecommunications engineering and operations personnel and is intended to be a supplemental technical aid to complement the DNX-related training programs available through Sycamore Networks Education Services. For additional information, refer to *Education/Training Services* in this section.

Document Structure

This Guide is made up of 11 sections that provide insight into the DNX-1u Access Gateway capabilities and feature set as follows:

1. **Overview** - Provides baseline information and specifications for the DNX-1u product offering.
2. **Installation** - Provides instructions for installation and set up of the DNX-1u.
3. **System Management** - Provides information on system management by Craft Terminal, Telnet session and Simple Network Management Protocol (SNMP).
4. **System-Level Configuration** - Provides information on configuring the following DNX-1u system-wide parameters:
   - Unit Profile - Set system-level configuration parameters including unit number and name, and T1 or E1 functionality.
   - Link APS Threshold Profiles - Define the link status criteria that triggers Automatic Protection Switching (APS) switchover.
   - Protection Groups Threshold Configuration (HAC) - Configure the protection group thresholds or configure the protection group.
   - Link Threshold Profiles (Enhanced T1/CSU) Configuration - Configure up to eight Link T1/CSU Threshold Profiles defining Link Down and Link Up system states based on Hard and Soft Fault Criteria. (Release 3.5 FP1/3.5 FP2 only)
   - System Date and Time - Input system date and time.
   - System Clock Source - Select clock sources and priorities.
   - SNMP Agent - Set up Simple Network Management Protocol (SNMP) agent.
   - User Profiles - Configure users and user security levels.
   - ENvision Plus - Set up DNX-1u for management using the ENvision Plus Network Management System (NMS).
   - TACACS+ - The Terminal Access Controller Access Control System (TACACS Plus) is a client-server security protocol that allows network administrators to configure user names and passwords on a centralized, secure server instead of having to administer user names, passwords and user credentials on every managed piece of equipment in the network.

5. **Subsystem-Level Configuration** - Provides configuration information for DNX-1u Subsystems:
   - T1/E1 Subsystem - Provides information on configuring T1/E1 ports and Rapid Trunk Conditioning.
   - High-Speed Synchronous Data Subsystem - Provides information on configuring the High Speed Serial Data ports.
   - Router Subsystem - Provides information on configuring the Router Subsystem, which is also used to set up the Ethernet ports and OSPF configuration information.
   - Low-Speed Asynchronous Data Subsystem - Provides information on configuring the Low Speed Serial Data ports.
   - Contact Input & Output Subsystem - Provides information on configuring the Contact Input and Output Subsystem, which can be used to monitor up to 16 detector inputs and control up to six contact closure relays.
   - Voltage Measurement Subsystem - Provides information on configuring the Voltage Measurement Subsystem, which is capable of monitoring voltage levels from up to eight sources.
   - Ambient Temperature Measurement Subsystem - Provides information on configuring the Ambient Temperature Measuring Subsystem.
6. **Connection Maps** - Provides basic information on connection mapping.
7. **Status and Diagnostics** - Provides information on subsystem configuration (view-only), status displays, and diagnostics as follows:
   - T1/E1 Subsystem - View configuration, T1/E1 port status displays and T1/E1 port diagnostics, including loopback and BERT patterns.
   - High-Speed Synchronous Data Subsystem (HSSD) - View configuration, HSSD port status displays and HSSD port diagnostics, including loopback and Bit Error Rate Test (BERT) patterns.
   - Router Subsystem - View Local Area Network (LAN) and Virtual Wide Area Network (WAN) status displays, including Physical Port Statistics and Logical Port Statistics.
   - Low-Speed Asynchronous Data Subsystem (LSAD) - View configuration and LSAD port status displays.
   - Contact Input and Output Subsystem - View configuration and contact closure status display.
   - Voltage Measurement Subsystem - View configuration and voltage measurement status display.
   - Ambient Temperature Measurement Subsystem - View ambient temperature status display.
   - Transcoder (if equipped) - View configuration.
   - Power Supply - View power supply status display.
8. **Events** - Provides information on monitoring system events, displaying the System Event log, and configuring event reporting. This section also provides a list of each event that may occur during a DNX-1u session, the event code, the text of each event, and a description of each event.
9. **Utilities** - Provides information on router utilities, system database operation, system resets, downloading software, managing firmware, closing Telnet sessions, and serial number/part ID information.

10. **About** - Provides information displaying software and hardware release information and user information.

    A. **Regulatory Information** - Provides DNX-1u Regulatory Compliance Data.

Glossary - Provides definitions for terminology that pertains to the *DNX-1u User's Guide*.

Index - Provides location of important information contained in the *DNX-1u User's Guide*.

Conventions

To enhance the usability and clarity of this Guide, the following conventions are used to delineate specific types of information that are of importance to the user:

Warnings

Warnings are used to present information or describe conditions that if not observed could potentially result in bodily injury.

Figure 1: *Sample Warning*

WARNING

If there is already a power supply installed and power is applied, use extreme care when accessing the inside of the unit.

Cautions

Cautions are used to highlight a condition or action that could result in equipment damage or loss of traffic.

Figure 2: *Sample Caution*

CAUTION

Always use the card ejector to seat and unseat a module. Pushing or pulling on the edge of the circuit card may cause damage to the module.

Notes

Notes are used to point out something of special interest or importance to the user. Failure to read the note will not result in physical harm to the user, equipment or traffic.

Figure 3: *Sample Note*

Note: *A DNX-1u unit is globally configured for T1 or E1 operation, and not a mixture of both.*

ESD Cautions

Electrostatic Discharge (ESD) cautions remind the user that a particular module is sensitive to Electrostatic Discharge.

Figure 4: *Sample ESD Caution*

	**ESD CAUTION** Power Supply Module components are sensitive to electrostatic discharge. When handling this module, wear an anti-static wrist strap connected to frame ground to prevent damage to circuits from electrostatic discharge.

Revision Control

The information contained in this Guide is the most current available at the time of its publication. As features evolve or corrections warrant, revisions to this Guide will be produced and made available to customers via the Sycamore Networks website at http://www.sycamorenet.com. Please refer to the Document Number and Revision Level noted in the footer of this Guide to ensure the latest version is being utilized.

Quality Commitment

Sycamore Networks, as an ISO-9001® registered firm, is committed to customer value and the lasting quality of all its products, services and documentation. As an integral part of its continuous improvement program, Sycamore Networks is actively seeking feedback on the overall quality, usability and accuracy of this guide. Please forward any comments or suggestions directly to the Sycamore Networks Technical Publication staff at TechPubs@sycamorenet.com. Thank you for your patronage and assistance.

Technical Assistance Center

Sycamore Networks Technical Assistance Center (TAC) provides technical support 24 hours a day, 7 days a week (24 x 7). To contact the TAC:

E-mail: cstac@sycamorenet.com

Telephone support 24 x 7:

- 1-877-526-2321 (1-877-LAMBDA1) – toll-free in North America
- 0080005262321 – toll-free in Europe
- 1-978-250-3480 – toll call

All other calls, including sales and marketing information, call 1-978-250-2900

Education/Training Services

Sycamore Networks Education Services delivers focused, cost-effective education programs to help you design, operate, and manage Sycamore Networks products in your network.

Visit the Customer Training web site at http://customertraining.sycamorenet.com for detailed information about education and training services.

Table of Contents

THIS PAGE INTENTIONALLY LEFT BLANK.

Section 1
Overview

Introduction

The Sycamore Networks DNX-1u Access Gateway is an environmentally hardened, flexible and highly integrated Remote access platform that combines a digital cross-connect, traffic grooming, Ethernet switching, IP routing and extensive telemetry and remote management functionality into a cost-effective system designed to address the transport and remote management needs of global wireless and wireline network operators.

Figure 1-1: *DNX-1u Product*

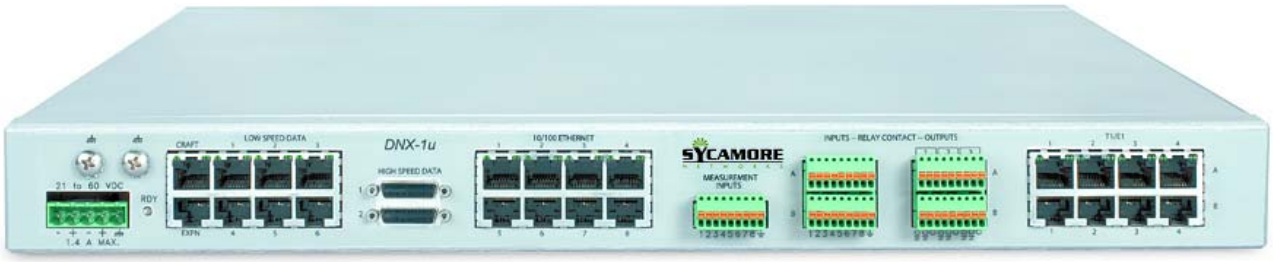

DNX-1u Product Family

The DNX-1u product family offers the following integrated feature set:

- Base Unit occupies a single Rack Unit (1RU)
- Redundant, field replaceable Direct Current (DC) power supplies with separate feeds
- Field replaceable Quad T1/E1 Port Modules
- Extended operating range of -20ºC to +65ºC at 0% to 95% humidity (non-condensing)
- Non-blocking Time Division Multiplexing (TDM) digital access cross-connect 1-1 and 1-0 switch fabric
- TDM Subrate (Nibble) based cross-connection (optional)
- Up to 8 T1/Clear T1 or E1/Clear E1 long/short haul ports
- High Availability Circuits Protection for T1 links (optional)
- 1+1 or 1:1 Automatic Protection Switching for T1/E1 links (optional)
- Optional 32 Voice Channel Pulse Code Modulation (PCM)-to/from-Adaptive Differential Pulse Code Modulation (ADPCM) Transcoder with 2:1 compression
- Two High-Speed Synchronous EIA-530/530A/422/23 or ITU-V.35/V.24/X.21 Data Communications Equipment (DCE) Data Ports
- 896 kbps Channelized, Multi-Protocol Router supporting up to 14 separate links @64 kbps
- Router Subsystem Command Line Interface (CLI), which is an alternate method to access the DNX-1u's internal router

- Eight Auto-Sensing 10/100-Base-T Ethernet Ports with Integral Hub/Switch Interface
- Six Low-Speed Asynchronous EIA-232/ITU-V.24 DCE Data Ports with Terminal Server
- Sixteen Analog/Digital Contact Inputs and six Form-C “Dry” Relay Contact Outputs
- Up to eight individual or up to four differential voltage measurements plus ambient temperature
- Rapid Trunk Conditioning
- X.25 over Transmission Control Protocol/Internet Protocol (TCP/IP) (XOT)
- Enhanced username/password management and security - Terminal Access Controller Access Control System (TACACS+ client)
- Enhanced T1/Channel Service Unit (CSU) functionality
- Managed Network Element Accessible using a Terminal, Telnet, Simple Network Management Protocol (SNMP) V1 and V2.0c, ENvision EMS and ENvision Plus NMS.
- Global Regulatory Compliance including the following certifications:
  - Canadian Standards Association (CSA)
  - European Conformity Mark (CE)
  - Federal Communications Commission (FCC)
  - Highly Accelerated Life Testing (HALT)
  - Underwriter’s Laboratories (UL)

Note: *Optional features are available only when the appropriate feature option is enabled through a software Feature Option Key. High Availability, APS and Enhanced T1/CSU are mutually exclusive and cannot be active at the same time.*

DNX-1u Feature Sets

The software functionality of the DNX-1u is divided into a collection of *core* (standard) and *optional* feature sets. Each feature set contains a set of closely related software. This allows the customer to purchase only the functionality that is needed for his application, and also allows the flexibility to activate more functions at a later date as system requirements change.

Core Features

The core feature set is present in all systems, and contains the following functionality:

- **Micro-DACS** - T1/E1 with TDM cross-connect
- **Basic Routing** - Low-Speed Asynchronous Data, Terminal Server, X.25 Over TCP/IP (XOT), Point-to-Point Protocol (PPP), Channelized Routing, Routing Information Protocol (RIP), Network Address Translation (NAT), Dynamic Host Configuration Protocol (DHCP), Packet Filtering and 24/32 DS0 Clear T1/E1 Routing.
- **High Speed Synchronous Data** - High Speed Synchronous Data Subsystem
- **Monitor and Control** - Input/Output Contact Closures, Voltage Measurement and Ambient Temperature Measurement Subsystems.
- **System Management** - Local Management using a Craft Port/Telnet/Trivial File Transfer Protocol (TFTP) and Remote Management using Telnet/TFTP/SNMP.

Optional Features

The core feature set can be enhanced with the addition of any of the following feature options:

- **Adaptive Differential Pulse Coded Modulation (ADPCM) Transcoder** - The Transcoder Subsystem

  Note: *This option is only supported on models that contain the necessary Transcoder hardware.*

- **Subrate Switching** - High and Low Nibble connections
- **High Availability Circuits (HAC) Protection** - T1 1+1 Circuit Protection Groups
- **T1/E1 APS** - 1+1 Automatic Protection Switching (APS) and 1:1 APS
- **Advanced Routing** - Open Shortest Path First (OSPF) Routing over both Point-to-Point Protocol (PPP) and Frame Relay Wide Area Network (WAN) links.
- **Enhanced T1/CSU** - T1 CSU operation with configurable alarming

  Note: *High Availability Circuits Protection, APS, and Enhanced T1/CSU are mutually exclusive. Only one can be active at a time.*

- **Enhanced Management** - TACACS+ (current) or Remote Authentication Dial-In User Service (RADIUS) access (future).

Figure 1-2: *Typical DNX-1u Application*

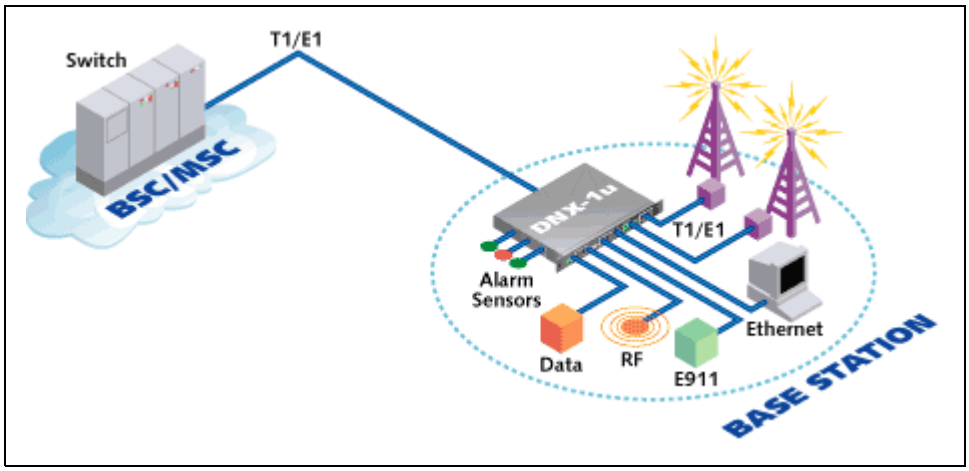

Consult the Sycamore Networks website at http://www.sycamorenet.com for additional feature details, application insight and the latest product announcements.

Physical Attributes

The DNX-1u product line consists of a number of pre-configured and field upgradeable base unit configurations.

CAUTION

There are no field serviceable components contained in the product. In the event of confirmed failure, the appropriate unit and/or modules should be returned with prior authorization to Sycamore Networks in accordance with the applicable warranty and service agreement terms.

Base Unit

The DNX-1u base unit is a single rack unit high system that supports a wide range of integrated physical interfaces as well as field-exchangeable Power Supply and Quad T1/E1 Modules. Two hardware versions of the base unit can be ordered, with or without voice transcoder support.

Figure 1-3: *DNX-1u Connector Panel View (Mounting Ears Not Shown)*

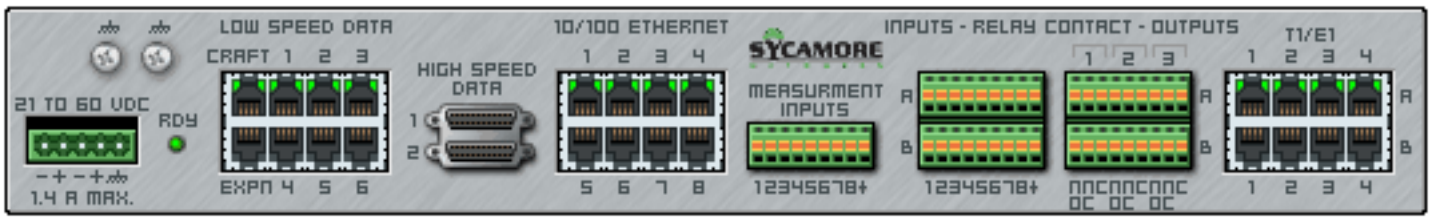

Figure 1-4: *DNX-1u Module Panel View (Cover Removed)*

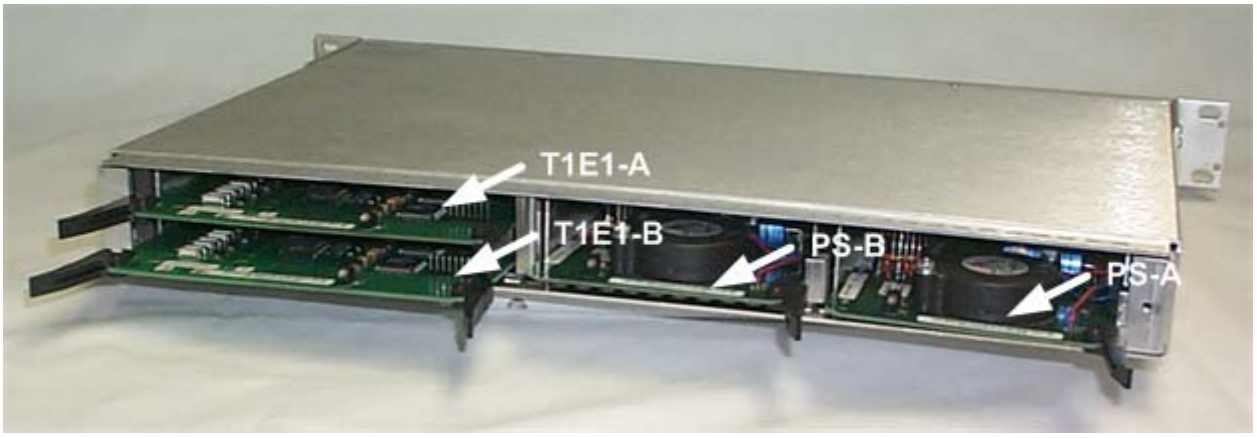

Power Supply Modules

Up to two redundant DC Power Supply Modules can be installed in the base unit. These are identified as Power Supply A and B; refer back to Figure 1-4 for location.

Figure 1-5: *DNX-1u DC Power Supply Module*

Quad T1/E1 Modules

Up to two non-redundant four-port T1/E1 Port Modules can be installed in the base unit. The modules are identified as T1E1 A and B; refer back to Figure 1-4 for location. Although these modules are capable of supporting T1 and E1 applications, the DNX-1u system must be globally configured for either T1 or E1 operation.

Figure 1-6: *DNX-1u Quad T1/E1 Module*

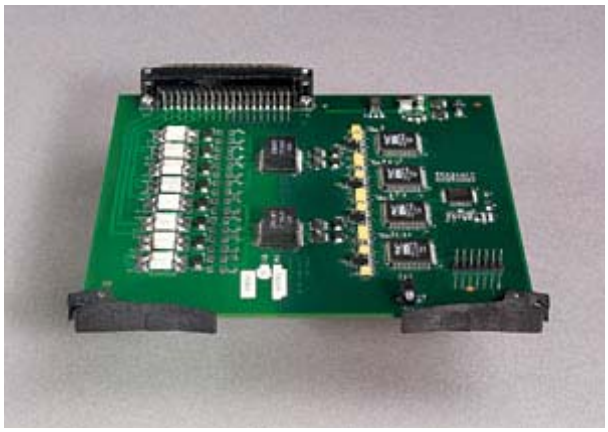

Note: *When only one DNX-1u slot is populated with a Quad T1/E1 Module, it MUST be located in slot A (top slot).*

Dual External AC Power Supply

The optional DNX-1u Dual External Alternating Current (AC) Power Supply (Sycamore Networks part number CBK-016-21048) can be used to allow the DNX-1u DC chassis to operate using load-sharing redundant AC power supplies. Figure 1-7 shows the Dual External AC Power Supply.

Figure 1-7: *Dual External AC Power Supply*

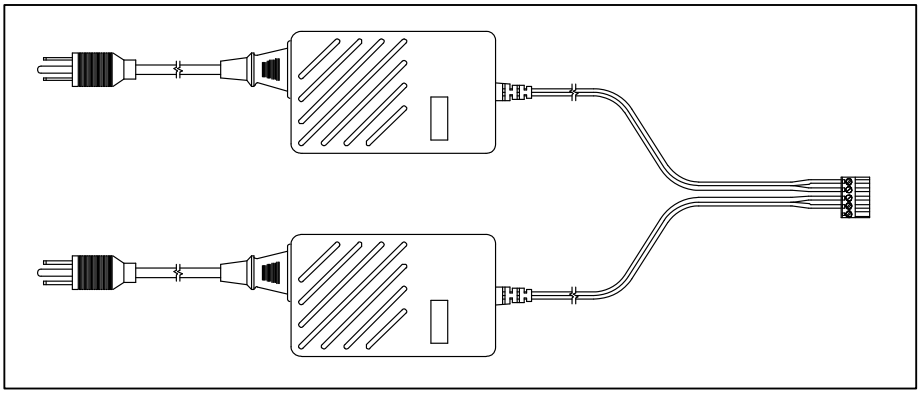

Configuration Options

To facilitate customer installations, a number of pre-configured DNX-1u units can be ordered where the number in the description denotes the quantity of T1/E1 ports; for example, 4 or 8 ports.

- The first letter identifies the installed DC Power Supply arrangement; for example, “D” for dual and “S” for single power supplies.
- The presence of a second letter specifies whether or not a transcoder is included; for example, “T” indicates with transcoder and no letter indicates without.
- Additionally, DC Power Supply and Quad T1/E1 Modules can be ordered separately for field sparing and upgrade purposes.

Note: *The DNX-1u must be ordered with the “Base Unit Software” (part no. SWK-016-00121), which provides the DNX-1u core features including Basic Routing, High Speed Synchronous Data, Monitor and Control, and System Management. Optional functions can be added at a later date as system requirements change.*

Table 1-1: *DNX-1u Product Portfolio*

Order Number	Product Description
MKT-016-02801	**DNX-1u 8D Base Unit**
	Pre-configured DNX-1u Base Unit without transcoder hardware support containing eight T1/E1 ports and dual DC power supplies. Includes Craft port cable and adapters, Electronic Industries Association (EIA) rack mounting ears and Cable Strain Relief Bar.
MKT-016-02401	**DNX-1u 4D Base Unit**
	Pre-configured DNX-1u Base Unit without transcoder hardware support containing four T1/E1 ports and dual DC power supplies. Includes Craft port cable and adapters, EIA rack mounting ears and Cable Strain Relief Bar.
MKT-016-02811	**DNX-1u 8DT Base Unit (Transcoder)**
	Pre-configured DNX-1u Base Unit with transcoder hardware support containing eight T1/E1 ports and dual DC power supplies. Includes Craft port cable and adapters, EIA rack mounting ears and Cable Strain Relief Bar.
MKT-016-02411	**DNX-1u 4DT Base Unit (Transcoder)**
	Pre-configured DNX-1u Base Unit with transcoder hardware support containing four T1/E1 ports and dual DC power supplies. Includes Craft port cable and adapters, EIA rack mounting ears and Cable Strain Relief Bar.
MKT-016-01401	**DNX-1u 4S Base Unit**
	Pre-configured DNX-1u Base Unit without transcoder hardware support, containing four T1/E1 ports and single DC power supply. Includes Craft port cable and adapters, EIA rack mounting ears and Cable Strain Relief Bar.
MKT-016-01048	**DNX-1u Power Supply Module - Spare/Upgrade**
	Power Supply Module for the DNX-1u, available either for sparing or for upgrades to existing systems with a single power supply.
MKT-016-20104	**DNX-1u Quad T1/E1 Module - Spare/Upgrade**
	Quad T1/E1 Module for the DNX-1u, available either for sparing or for upgrades to existing systems with a single Quad T1/E1 Module.

Table 1-1: *DNX-1u Product Portfolio (Continued)*

Order Number	Product Description
SWK-016-00121	**DNX-1u Base Unit Software (Required)**
	Base Unit Software license (provide by software key) to enable support for local/remote management, high-speed synchronous data ports, integral channelized router, and monitor and control interfaces. Base Unit Software licenses are not included with Base Unit shipments (shipped separately).
SWK-016-00204	**DNX-1u Enhanced Management Feature Option**
	Feature Option license (provided by software key) to enable TACACS+ (current) or RADIUS (future) access. Feature Option licenses are not included with Base Unit shipments (shipped separately).
SWK-016-00301	**DNX-1u ADPCM Transcoding Feature Option**
	Feature Option license (provided by software key) to enable ADPCM transcoding functionality (requires transcoder enabled DNX-1u Base Unit hardware). Feature Option licenses are not included with Base Unit shipments (shipped separately).
SWK-016-00401	**DNX-1u Subrate Switching Feature Option**
	Feature Option license (provided by software key) to enable subrate switching. Feature Option licenses are not included with Base Unit shipments (shipped separately).
SWK-016-01101	**DNX-1u High Availability Circuits Feature Option**
	Feature Option license (provided by software key) to enable High Availability Circuit Protection. Feature Option licenses are not included with Base Unit shipments (shipped separately).
SWK-016-00702	**DNX-1u Advanced Routing Feature Option**
	Feature Option license (provided by software key) to enable the Advanced Routing feature for Open Shortest Path First (OSPF). Option licenses are not included with Base Unit shipments (shipped separately).
SWK-016-00801	**DNX-1u Automatic Protection Switching (APS) Feature Option**
	Feature Option license (provided by software key) to enable 1+1 Automatic Protection Switching and 1:1 Automatic Protection Switching functionality. Feature Option licenses are not included with Base Unit shipments (shipped separately).
SWK-016-00101	**Enhanced T1/CSU Feature Option**
	Feature Option license (provided by software key) to enable T1/CSU operation that includes software-configurable link alarming on Hard/Soft Faults.
MAK-016-00110	**DNX-1u Telco Rack Mount Adapter Kit**
	Rack mount bracket set to adapt the DNX-1u chassis for mounting in 19" or 23" wide equipment rack (or cabinet) that has 1" spaced mounting holes (Telco standard).
CBK-016-21048	**DNX-1u Dual External AC Power Supply**
	External Dual AC to DC power supply allows DNX-1u DC chassis to operate using load-sharing redundant AC power supplies. Input: 100-240 vAC, 47-63Hz 1.0A. Output: 24 VDC, 2.1A or 50W MAX.
CDR-001-02811	**Access Gateways Product Documentation CD**
	CD-ROM containing the *DNX-1u Access Gateway Reference Guide* and *DNX-1u Access Gateway User's Guide*.

System Technical Specifications

Table 1-2: *DNX-1u Base Unit Technical Specifications*

Height	1.75 inches (45mm) (1RU)
Width (without Mounting Brackets)	16.7 inches (424mm)
Depth	12 inches (305mm)
Weight	9 lbs (fully configured)
Operating Temperature	-20°C (-4°F) to 65°C (149°F)
Humidity	0% to 95% (non-condensing)
T1/E1 Module Slots	2
Power Supply Module Slots	2
Security Levels	• Admin • Provision • Test • View Only

Table 1-3: *DC Power Supply Module Specifications*

Maximum Operating Range	21-60 VDC (polarity insensitive) ***Note:*** *The unit will not operate outside this range.*
Input Power	70 watts
Maximum Current	1.4 A
Fuse Ratings	F1 and F2: 2 Amp, 125V, Fast Acting (Not user-serviceable)

Table 1-4: *Embedded Management System Technical Specifications*

	Management Technique		
	Craft Terminal	**Telnet Session**	**SNMP**
Access Method	Direct connection to Craft port using RJ-45 connector	Network using any of eight Ethernet ports	Network using any of eight Ethernet ports
Maximum Number of Sessions	1	8	Depends upon Network Configuration
Management Method	Embedded Menus	Embedded Menus	SNMP

Table 1-5: *T1/E1 Technical Specifications*

Physical Interface	8 ports with RJ-48C Female connectors
Electrical Interface Protocol	T1 E1
Line Rate	T1 - Up to 1.536 Mbps (Nx56/64 kbps), 32 kbps Subrate E1 - Up to 2.048 Mbps (Nx56/64 kbps), 32 kbps Subrate
Timing Modes	Internal - DNX-1u Clock Source (Internal) T1/E1 - Clocking from T1/E1 Link Sync - Clocking from HSSD Link (Not recommended for T1/E1 timing)
Loopbacks	Local Remote Line Payload User Defined Backplane
BERT Patterns	2^{11}-1 PRBS (2047) 2^{15}-1 PRBS 2^{15}-1 PRBS Inverted 2^{20}-1 PRBS 2^{20}-1 PRBS w/ 14 zero limits (QRSS)
Alarms	Near End Loss of Frame Near End Loss of Signal Near End Alarm Indication SIgnal (Tx AIS) Near End Transmit Slip Near End Receive Slip Near End Severely Errored Frame (SEF)
Fuse Ratings	F1: 7 Amp, 125V, Fast Acting (Not user-serviceable) F2 - F17: 500mA, 600V, telecom protection (Not user-serviceable)
Circuit Protection	High Availability Circuit Protection (Feature Option) 1+1 and 1:1 Automatic Protection Switching (Feature Option)

Table 1-6: *High-Speed Synchronous Data Specifications*

High Speed Data Ports	2 Independent (Slimline DB-26 Female)
Soft-Selectable DCE Interfaces	EIA-530, EIA-530A, EIA-422, ITU-V.35, ITU-X.21 or EIA-232 (ITU-V.24)
Data Rates	8 kbps XOT and 16 kbps XOT (V.35 and EIA-232) Nx56/64 kbps up to 2048 kbps (EIA-232/ITU-V.24 limited to 128 kbps)
Timing Modes	Internal, External or Internal/External (ITU-X.21 supports Internal only)
Loopbacks	Local and Remote V.54
BERT Patterns	All Zeroes, All Ones and 2047 PRBS
Alarms	Receive First In First Out (FIFO) Error, Transmit FIFO Error, Clock Edge Error and Carrier Failure

Table 1-7: *Ethernet Port Technical Specifications*

Physical Interface	8 ports with RJ-45 Female connectors
Electrical Interfaces	Ethernet Interfaces with Auto-MDIX feature
Line Rate	10 Mbps (Internal buffering to rate adapt)
Alarms	Communication Error, Configuration Error

CAUTION

The DNX-1u Ethernet port is for Intra-office use only as specified in IEEE 802.3. If the DNX-1U is used for inter-office (building) applications an Ethernet surge suppression device is required to provide isolation for the DNX-1U Ethernet ports.

Table 1-8: *Low-Speed Asynchronous Data Technical Specifications*

Physical Interface	6 ports with RJ-45 Female connectors
Electrical Interface Protocol	Terminal-Server, PPP, Serial Line Internet Protocol (SLIP), Transparent Server and Auto-Initiate
Line Rate	1200, 2400, 4800, 9600, 19200 and 38400 bps
Alarms	Receive FIFO Error, Transmit FIFO Error, Overrun Error, Parity Error and Framing Error

Table 1-9: *Contact Input & Output Specifications*

	Contact - In	Contact - Out
Ground Reference	DNX-1u (2 ground pins provided)	External Common
Maximum Voltage	+60 VDC or -60 VDC	220 VDC[a]
Maximum Current	5mA	2 A[a]
Maximum Power	Limited by design	60 W[a]
Bi-State Detectors	16 Independent Inputs	
High State (Logical 1)	Analog: +2.0 VDC to +60 VDC Digital: Dry Contact - Open	
Low State (Logical 0)	Analog: -60.0 VDC to +0.5 VDC Digital: Dry Contact - Closed	
Transition Alarms	Disable, Low or High States	
Form-C Relays		6 Independent Outputs
Manual Control		Disable, Open or Close Commands
Automatic Control		Critical, Major or Minor Alarms

a. The maximum voltage and current figures are absolute maximum values; however, the 60 W power figure is the actual limiting factor. For example: 30 VDC@2 A, 60 VDC@1A, or 220 VDC@.27A are acceptable, but 220 VDC@2A is not because power would be 440 W.

Table 1-10: *Voltage Measurement Specifications*

Ground Reference	DNX-1u (1 ground pin provided)
Maximum Voltage	+60 VDC or -60 VDC
Maximum Current	±5 mA
Input Ports	8 (up to 8 single-ended or 4 differential or combination)
Input Impedance	13kΩ
Measurement Range	-60 VDC to +60 VDC
Measurement Accuracy	3% of measured voltage
Threshold Alarming	User selectable upper and lower voltage limits

Section 2
Installation

Equipment Unpacking and Inspection

The DNX-1u is shipped in a cardboard carton with a cardboard and plastic film insert to protect the units from shock and vibration during shipment. When unpacking equipment, do not cut the plastic film (flexing the cardboard will release the unit). Although this protection should be sufficient, all equipment should still be inspected when unpacked to insure that no shipping damage has occurred.

To inspect equipment:

- Inspect the condition of all shipping boxes.
- Remove the equipment from the boxes and compare all items to the packing list.
- Inspect the equipment for damage.
- Save the shipping container and packing material in case the unit has to be transported at a later date.

If damage to the unit is found or items listed in the packing list are missing, notify Sycamore Networks Customer Service and the equipment shipping firm.

Note: *Shippers reserve the right to inspect packaging in the event of a damage claim.*

If a product return is warranted, use the original packing material to return the equipment to Sycamore Networks following the instructions provided by Customer Service. For details, refer to the Warranty information in Technical Bulletin included with the DNX-1u packaging.

Equipment Installation

This purpose of this section is to provide procedures and guidelines for the physical installation of a DNX-1u base unit.

Site Environmental Recommendations

When selecting a site to install the DNX-1u, choose a protected area in an environment that is:

- Temperature regulated
- Humidity controlled
- Isolated from large motors and heating units

Required Tools and Cables

- Basic Telecommunications installation tool kit including flat and Phillips-head screwdrivers, wire strippers, etc.
- Rack mounting hardware including screws and washers
- Craft port cable
- Interface cables
- Optional: Volt-Ohm Meter (VOM)

Rack Mounting Options

Included with each DNX-1u shipment is an EIA rack mounting kit that consists of two identical 90-degree metal brackets plus the necessary #4-40 screws to install them on the sides of the unit. By using the appropriate screw holes provided, the DNX-1u can be flush or center mounted in 19" or 23" racks or cabinets with either the connector panel or module panel facing front.

Optional DNX-1u Telco Rack Mounting

An optional Telco-style rack mount bracket kit is also available. This kit is used to adapt the DNX-1u chassis for mounting in 19" or 23" wide equipment rack (or cabinet) that has 1" spaced mounting holes (Telco standard).

Flush Mounting the DNX-1u into a 19”Rack

To flush mount the DNX-1u into a 19” rack, follow the procedure below.

1. Using four screws for each bracket, attach the mounting brackets to the DNX-1u as shown below. Figure 2-1 shows a 19” flush mount with the connector panel facing the front, while Figure 2-2 shows a 19” flush mount with the module panel facing the front.

Figure 2-1: *Mounting Brackets Positioned for 19” Flush Mount (Connector Panel Facing Front)*

Figure 2-2: *Mounting Brackets Positioned for 19" Flush Mount (Module Panel Facing Front)*

2. Line up the oval holes of the mounting brackets on the DNX-1u unit with the 19" equipment rack, and slide the unit into the equipment rack.

3. Secure the DNX-1u unit to the equipment rack using #10-32 or #12-24 (for Telco rack) thread-forming screws (see Figure 2-6).

Flush Mounting the DNX-1u into a 23” Rack

To flush mount the DNX-1u into a 23” rack, follow the procedure below.

1. Using two screws for each bracket, attach the mounting brackets to the DNX-1u as shown in Figure 2-3. These brackets can also be attached to allow the DNX-1u to be mounted with module panel facing to the front.

Figure 2-3: *Mounting Brackets Positioned for 23” Flush Mount (Connector Panel Facing Front)*

2. Line up the oval holes of the mounting brackets on the DNX-1u unit with the 23” equipment rack, and slide the unit into the equipment rack.

3. Secure the DNX-1u unit to the equipment rack using #10-32 or #12-24 (for Telco rack) thread-forming screws (see Figure 2-6).

Center Mounting the DNX-1u into a 19” Rack

To center mount the DNX-1u into a 19” rack, follow the procedure below.

1. Using four screws for each bracket, attach the mounting brackets to the DNX-1u as shown in Figure 2-4. These brackets can also be attached to allow the DNX-1u to be mounted with the model panel facing to the front.

Figure 2-4: *Mounting Brackets Positioned for 19” Center Mount (Connector Panel Facing Front)*

2. Line up the oval holes of the mounting brackets on the DNX-1u unit with the 19” equipment rack, and slide the unit into the equipment rack.

3. Secure the DNX-1u unit to the equipment rack using #10-32 or #12-24 (for Telco rack) thread-forming screws (see Figure 2-6). The center, not the front, will be resting on the equipment rack.

Center Mounting the DNX-1u into a 23” Rack

To center mount the DNX-1u into a 23” rack, follow the procedure below.

1. Using two screws for each bracket, attach the mounting brackets to the DNX-1u as shown in Figure 2-5. These brackets can also be attached to allow the DNX-1u to be mounted with the module panel facing to the front.

Figure 2-5: *Mounting Brackets Positioned for 23” Center Mount (Connector Panel Facing Front)*

2. Line up the oval holes of the mounting brackets on the DNX-1u unit with the 23” equipment rack, and slide the unit into the equipment rack.

3. Secure the DNX-1u unit to the equipment rack using #10-32 or #12-24 (for Telco rack) thread-forming screws (see Figure 2-6). The center, not the front, will be resting on the equipment rack.

Cabling the DNX-1u

Proper Grounding

Grounding Using a Rack Mount

To ground the DNX-1u using a rack mount, follow the procedure below.

Mount the DNX-1u to the equipment rack using rack mounting screws (supplied), as shown in Figure 2-6. Screws should be #10-32 for a standard EIA rack or #12-24 for a Telco rack.

Figure 2-6: *Grounding Using a Rack Mount*

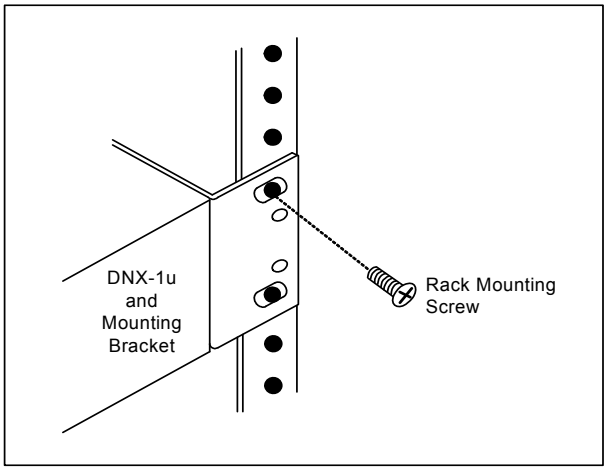

Grounding Using a Grounding Strap

To ground the DNX-1u using a grounding strap, follow the procedure below.

Using two #10-32 screws and external-toothed lock washers (provided), connect a grounding strap lug to the grounding points near the power terminal block as shown in Figure 2-7.

Figure 2-7: *Grounding Strap Connection*

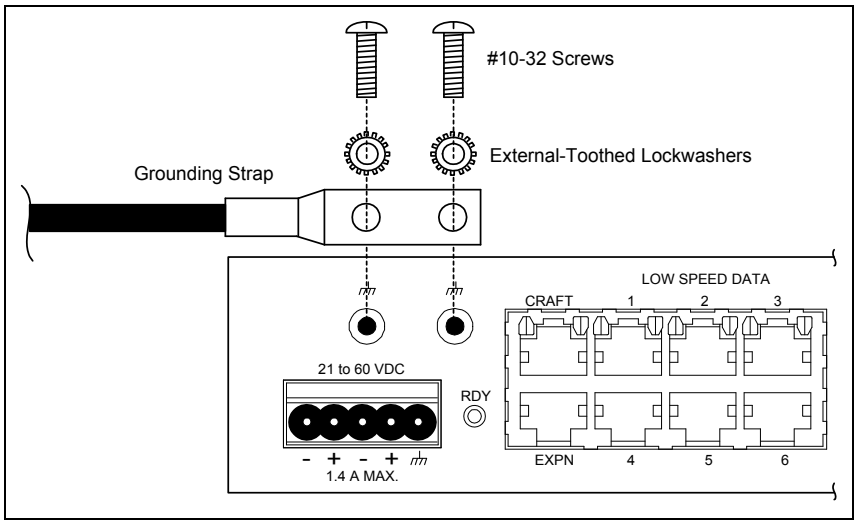

DNX-1u DC Power

To take advantage of the redundant power supplies, the DNX-1u requires two -48 VDC or +24 VDC power connections.

Power Requirements

The DNX-1u is designed to operate on ±21-60 VDC power, at a maximum of 1.4 Amps or 70 Watts. Requirements for the actual power connection are as follows:

- The supply wiring should be 12 to 20 American Wiring Gauge (AWG).
- The DC Power supply should be electrically isolated from any AC source.
- The DC Power source should be reliably connected to earth ground.
- When connecting to a centralized DC power source, the supply lead (-48 V or +24 V) must be protected with a 2.5 Amp delayed action (slow-blow) fuse or equivalent current limiting device. A readily accessible disconnect device must be incorporated in the building installation wiring as well.
- The DNX-1u must be installed in accordance with 110-16, 110-17, and 110-18 of the National Electrical Code, American National Standards Institute/ (ANSI/NFPA) No. 70.

Dual External AC Power Supply

The optional DNX-1u Dual External AC Power Supply (Sycamore Networks part number CBK-016-21048) can be used to allow the DNX-1u DC chassis to operate using a load-sharing redundant AC power supplies. This Dual Power Supply configuration is plugged into a standard AC outlet, then connected to the DNX-1u using the attached power supply terminal plug.

Connecting the DNX-1u to DC Power

The DNX-1u can be connected to DC power utilizing the Dual External AC Power Supply described above, or by using existing DC power source.

To connect the DNX-1u to DC power, follow the procedure below.

1. Mount the unit in a rack as specified previously.
2. Shut off power to the DC supply leads.
3. Strip the insulation back approximately 5/16 inch (8mm) from the end of each lead.
4. Note the positions of earth, negative and positive on the DC power plug (designations are on the DNX-1u chassis).
5. Remove the DC power terminal block from the mating receptacle on the DNX-1u rear panel (see Figure 2-8).

Figure 2-8: *Remove Power Terminal Block*

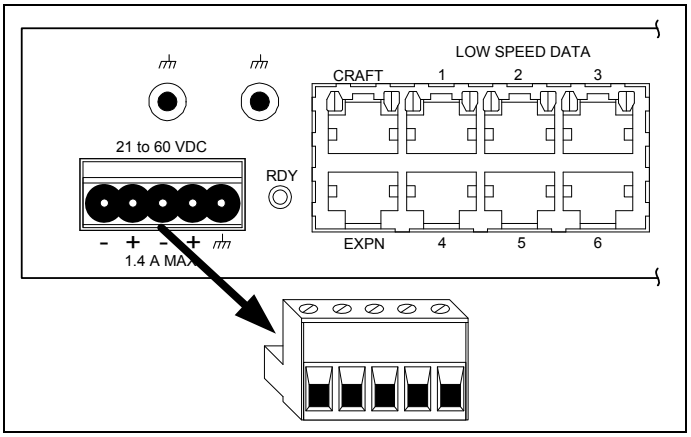

6. Insert the “earth” lead into the earth terminal clamp on the power terminal block and tighten the screw using a small flat screwdriver (see Figure 2-9).

Figure 2-9: *Connecting DC Power Leads*

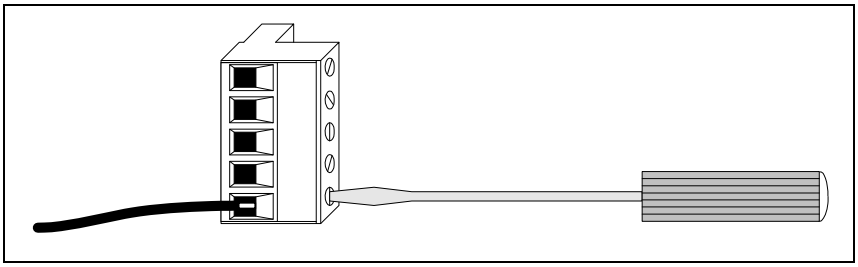

7. Insert the “positive” lead into the positive terminal clamp and tighten the clamp screw.
8. Insert the “negative” lead into the negative terminal clamp and tighten the clamp screw.

Note: *The left-side positive and negative pins of the terminal receptacle correspond to Power Supply PS-A (located closest to the side of the cabinet) and the right-side positive and negative pins are for Power Supply PS-B (located in the center of the cabinet).*

9. Insert the power terminal block into the mating receptacle on the rear panel.
10. Apply power to the unit. The LED on the front panel will flash as the unit powers up, loads software, and runs a self-test. This will take approximately one minute.
11. To minimize disturbance to the wires through casual contact, secure the cables to the rack frame using multiple cable ties. The first tie should be within 6 inches of the terminal block.

Cable Strain Relief Bar

A 3.5” Cable Strain Relief Bar (Figure 2-10) is included with the DNX-1u, and can be used with both 19” and 23” equipment racks for flush and center mount applications. Once the DNX-1u is mounted in a rack, cables can be attached and then bundled together and fastened to the Cable Strain Relief Bar using tie-wraps (not included).

Flush Mounting the Cable Strain Relief Bar

For a flush mount, line up the Cable Strain Relief Bar with the four holes on each side of the DNX-1u chassis. Place the mounting ears on the outside of the bar with the holes aligned, then use four #4-40 screws per side (included) to install the bar and the mounting ears in place.

Center Mounting the Cable Strain Relief Bar

For a center mount, attach the mounting ears to the center of the chassis using four #4-40 screws (included) for each side. Then mount the Cable Strain Relief Bar directly to the front of the chassis, using four extra #4-40 screws (included) for each side.

Figure 2-10: *3.5” Cable Strain Relief Bar*

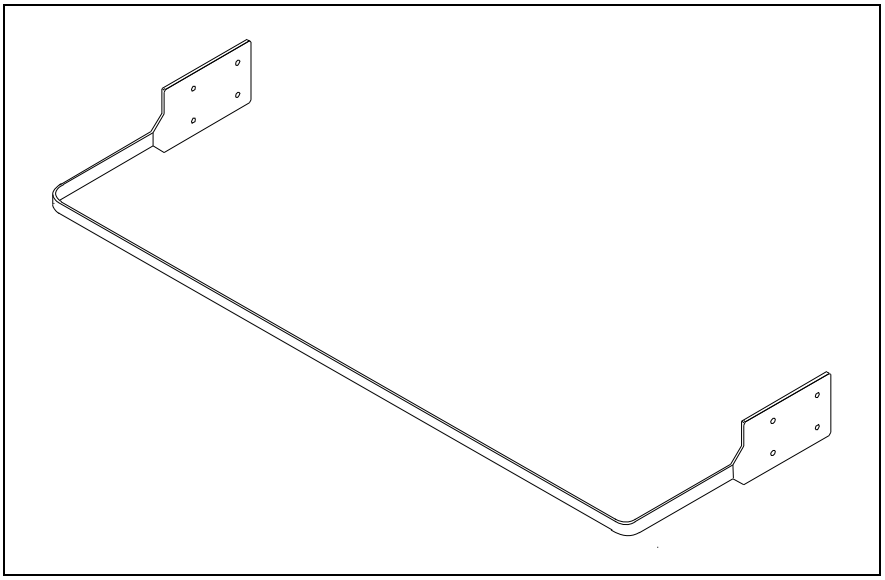

Power Supply Module

Up to two redundant DC Power Supply Modules can be installed in the DNX-1u. These are identified as Power Supply A and B. In the event that you want to add or replace a DNX-1u Power Supply Module, follow the procedure below.

ESD CAUTION

Power Supply Module components are sensitive to electrostatic discharge. When handling this module, wear an anti-static wrist strap connected to frame ground to prevent damage to circuits from electrostatic discharge.

Installing a Power Supply Module

To install a Power Supply Module, follow the procedure below.

1. Loosen the thumbscrews on the rear panel of the DNX-1u and remove the rear cover.
2. Remove the Power Supply Module from the anti-static bag.
3. Hold the Power Supply Module horizontally (component side up) and with the card ejector on the right side perpendicular to the module.
4. Slide the Power Supply Module into the slot in the DNX-1u chassis following the white card guides (see Figure 2-11).
5. Once the Power Supply Module is inserted nearly all the way into the slot (card ejector will start to close), use the card ejector to seat the module.

CAUTION

Always use the card ejector to seat and unseat a Power Supply Module. Pushing or pulling on the edge of the circuit card may cause damage to the module.

6. Install any other modules as necessary, then re-install the DNX-1u rear cover and tighten the thumbscrews with a screwdriver.

Figure 2-11: *Installing the Power Supply Module*

Quad T1/E1 Module

Up to two non-redundant four-port T1/E1 Port Modules can be installed in the DNX-1u. The modules are identified as T1E1 A and B. In the event that you want to add or replace a DNX-1u T1/E1 Module, follow the procedure below.

ESD CAUTION

T1/E1 Module components are sensitive to electrostatic discharge. When handling this module, wear an anti-static wrist strap connected to frame ground to prevent damage to circuits from electrostatic discharge.

Installing a T1/E1 Module

To install a T1/E1 Module, follow the procedure below.

1. Loosen the thumbscrews on the rear module panel of the DNX-1u and remove the panel.
2. Remove the T1/E1 Module from the anti-static bag.
3. Hold the T1/E1 Module horizontally (component side up) slide it into the slot in the DNX-1u chassis following the white card guides (see Figure 2-12).
4. Once the T1/E1 Module is inserted nearly all the way into the slot (card ejectors will start to close), use equal pressure on both card ejectors to seat the module.

CAUTION

Always use equal pressure on both card ejectors to seat and unseat a T1/E1 Module. Uneven pressure or not using the ejectors at all (pushing or pulling directly on the edge of the circuit card) may cause damage to the module.

5. Install any other modules as necessary, then re-install the DNX-1u rear cover and tighten the thumbscrews with a screwdriver.

Figure 2-12: *Installing a T1/E1 Module*

Note: *When only one DNX-1u slot is populated with a Quad T1/E1 Module, it MUST be located in slot A (top slot).*

Connecting the Craft Terminal

Connect the Craft port terminal as shown in Figure 2-13.

Once the Craft terminal is connected, login to the system. If this is the first time the system has been logged into, or if there are no user IDs created on the system, the login and password will be blank (press Enter when prompted). It is recommended that at least one user ID at the Administrator access level be configured.

Figure 2-13: *Connect the Craft Terminal*

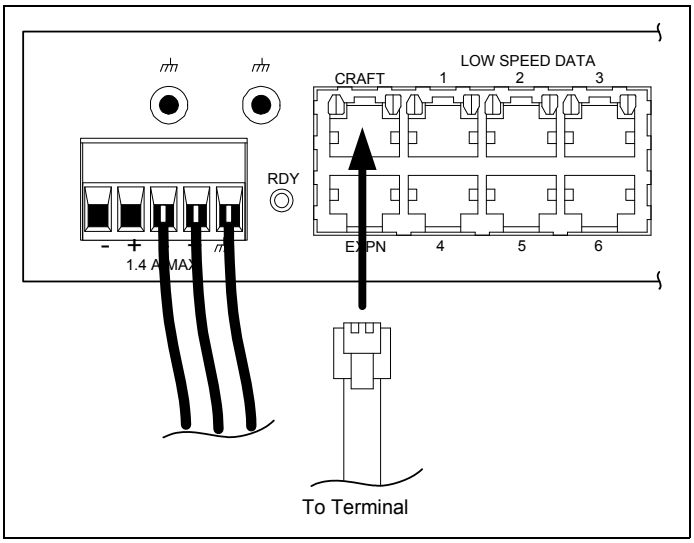

Table 2-1: *Craft Port Pinouts*

Serial Connector RJ-45 Female	Port Pins	Common Description	DNX-1u In/Out
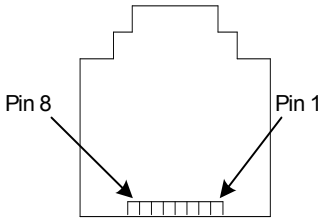	1	DSR (Data Set Ready)	Output
	2	CD (Carrier Detect)	Output
	3	DTR (Data Terminal Ready)	Input
	4	GROUND	GROUND
	5	Rx Data (Receive Data)	Output
	6	Tx Data (Transmit Data)	Input
	7	CTS (Clear to Send)	Output
	8	RTS (Request to Send)	No Connect

Table 2-2: *DB9 Craft Port Adapter (Terminal End)*

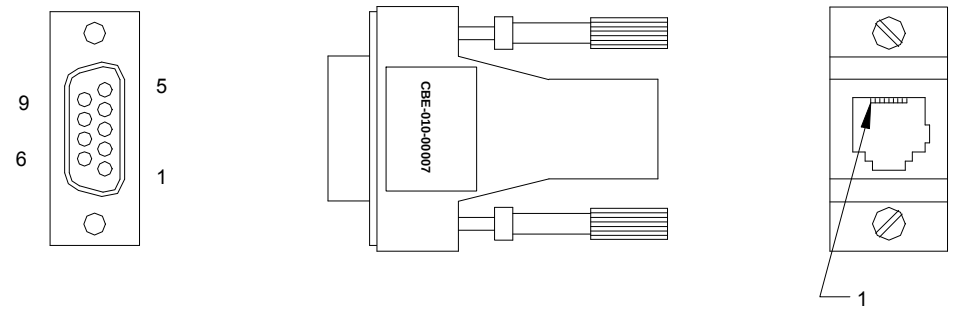

DTE (DB9-Female)	8 Pin Modular / DB9 Converter KRISTA 23-7541	DCE (RJ-45 Female)

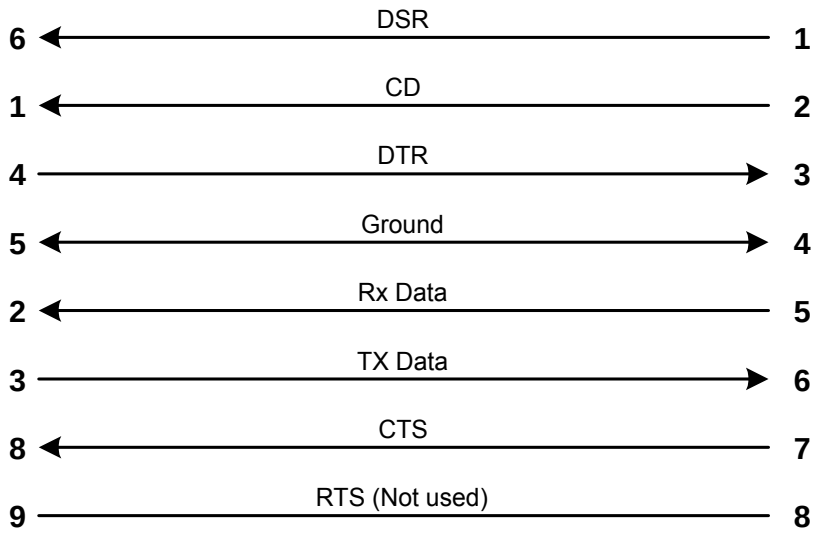

Table 2-3: *DB25F/RJ45F Craft Port Adapter (Terminal End)*

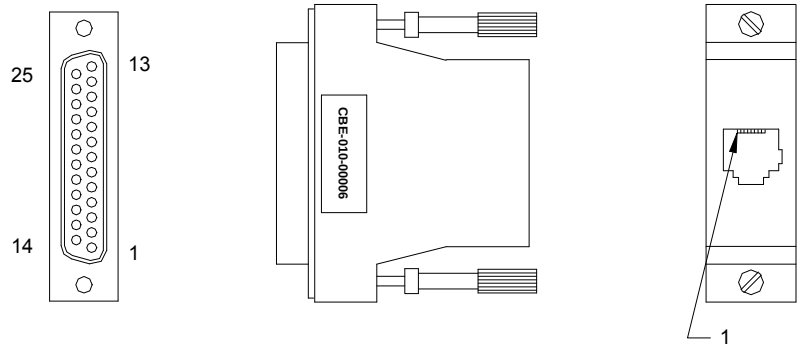

DTE (DB25-Female)	8 Pin Modular / DB25 Converter KRISTA 23-7691	DCE (RJ-45 Female)

6	← DSR	**1**
8	← CD	**2**
20	DTR →	**3**
7	↔ Ground	**4**
3	← Rx Data	**5**
2	TX Data →	**6**
5	← CTS	**7**
4	RTS (Not used)	**8**

IP Address Configuration

Once the DNX-1u is installed, powered up, and connected to a local terminal, the first item that must be configured is the unit's IP address. Once the IP address is assigned, the remaining configuration can be done remotely using Telnet or SNMP (refer to the appropriate sections for further details).

Configuring the IP address

To configure the IP address, follow the procedure below.

1. From the DNX-1u Main Menu, click on **Configuration**, **Subsystem Profile**, **ROUTER**, **Logical Port Summary** and then on **LAN**.

   The Logical Port Configuration Menu is displayed.
2. Enable IP and set the Port IP Address and Port IP mask. You do not need to adjust the other parameters at this time.
3. Configure other fields as needed, then press **X** to exit. When prompted, press **Y** to save the configuration.
4. A default gateway may need to be configured. To configure a default gateway, refer to the procedure below. Otherwise, proceed to step 5.
5. You can now log out of the system, connect your computer to an Ethernet port, and manage the DNX-1u at the faster Ethernet speeds using Telnet to the assigned IP address.

Configuring a Default Gateway

To configure a default gateway, follow the procedure below.

1. From the Router Configuration Menu select **IP** and then **Route Table**.

   The Route Table Configuration screen is displayed.
2. Move your cursor to a blank line and press **Enter**.
3. Then move your cursor to the Next Hop field and press **Enter**.
4. Type in the IP address of the default gateway and press **Enter**.
5. Configure other fields as needed, then press **X** to exit to the IP Route Table Configuration Menu, then press **X** again to exit to the IP Configuration Menu. When prompted, press **Y** to save the configuration.
6. Log out of the system, connect your computer to an Ethernet port, and manage the DNX-1u at the faster Ethernet speeds using Telnet to the assigned IP address.

Feature Option Keys

The software functionality of the DNX-1u is divided into a collection of core (standard) and optional feature sets. Each feature set contains a set of closely related software. This allows the customer to purchase only the functionality that is needed for his application, and also provides the flexibility to activate more functionality at a later date as application requirements change. These feature sets are activated by entering feature option keys (character strings) into the system. These keys are entered using the Feature Keys Menu.

Note: *The Feature Option Key number is serial number and/or customer dependent. A Feature Option Key will only function for a specific customer with a unit that has the corresponding serial number.*

Note: *You may not have to activate your key if the selection option(s) were pre-installed at the factory. If you are not sure, check the Feature Keys Menu (see page 2-22) to verify the option keys installed in your system.*

The *Feature Option Key* number is provided on a 2-part label, as illustrated in Figure 2-14. The label is attached to the outside of the DNX-1u shipping box.

The key number is serial number and/or customer dependent. In order to keep the key number with the unit it applies to, it is recommend that the top half of the sticker containing the key number be removed from the box and affixed to the inside of the DNX-1u module panel cover. This will allow it to remain with the affected unit and make it easily accessible in the future

Figure 2-14: *Feature Option Key Label*

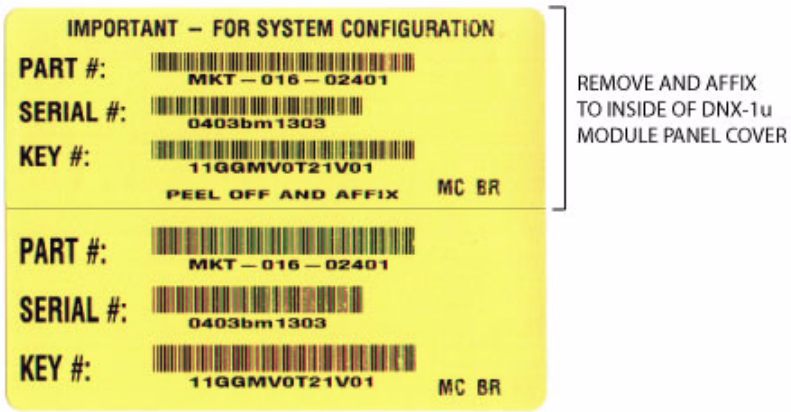

In the lower right-hand corner of the label, two-letter feature option identification codes are provided to indicate the feature options associated with the unit's feature option key. These codes are described in Table 2-4.

Feature Option Codes

Table 2-4 lists the Feature Option codes for the DNX-1u.

Table 2-4: *Feature Option Identification Codes*

Code	Feature Option Key
AI	All Inclusive
AP	T1/E1 APS: *1+1 Automatic Protection Switching* and *1:1 Automatic Protection Switching.*
AR	Advanced Routing: *Open Shortest Path First (OSPF).*
BR	*Basic Routing: Terminal Server (ASYNC), XOT, PPP, Channelized Routing, RIP, NAT, DHCP, Packet Filtering and 24/32 DS0 Clear T1/E1 Routing.*
EC	Enhanced T1 Channel Service Unit (CSU) operation with configurable alarming.
EM	Enhanced Management: *TACACS+* (current) or *RADIUS* access (future).
HA	High Availability Circuits (HAC): *T1 1+1 Circuit Protection Groups*
MC	Monitor and Control: *Low Speed Asynchronous Data*, *Input/Output Contact Closures*, *Voltage Measurement*, and *Ambient Temperature Measurement Subsystems.*
SS	Subrate Switching: *High* and *Low* Nibble (4-bit) connections.
TC	ADPCM Transcoder: Transcoder Subsystem. ***Note:*** *Only supported on models that contain the necessary Transcoder hardware.*

Activating Feature Options

Note: *Prior to performing this action, ensure that you have the Feature Option Key number present. This will be attached to the outside of the DNX-1u packaging, or it may be attached to the unit itself.*

To activate feature options, follow the procedure below.

1. From the DNX-1u Main Menu, click on **About** and then on **Feature Keys**.

   The Feature Keys Menu is displayed, as shown in Figure 2-15.

Figure 2-15: *Feature Keys Menu*

```
System ID:                                                        Help = [?]
Sycamore Networks, Inc.              DNX-1u

                                  Feature Keys


 Customer ID: 0                        Demo Time To Go Days: 0    Hours: 0

 ADPCM Tcoder           Active
 Subrate Switching      Active
 Monitor and Control    Active
 Basic Routing          Active
 Advanced Routing       Active
 High Availability      Key Needed
 APS                    Active
 Enhanced T1/CUS        Inactive
 Enhanced Management    Active





   [K]ey      [D]elete Key
```

Note: *High Availability, APS and Enhanced T1/CSU are mutually exclusive and cannot be active at the same time.*

2. Press **K**.

   The Feature Key Entry Menu is displayed.

3. Press **Enter**.

   The cursor is displayed on an empty line.

4. Type in the software key number (found on the label contained in the DNX-1u packaging) exactly as written and then press **Enter** to store.

Note: *The Feature Option Key number is serial number and/or customer dependent. A key number will only function for a specific customer with a unit that has the corresponding serial number.*

5. Press **X** to save and activate all of the needed options.

   You are returned to the Feature Keys Menu.

6. Check to ensure the word *"Active"* is now displayed next to your specific options.

Note: *A Feature Option Key must be purchased that will activate your chosen feature options. If you do not have the required key, contact Sycamore Networks Customer Support for information.*

The software functionality of the DNX-1u is divided into a collection of core (standard) and optional feature sets. Each feature set contains a set of closely related software. This allows the customer to purchase only the functionality that is needed for his application, and also provides the flexibility to activate more functionality at a later date as application requirements change. These feature sets are activated by entering feature option keys (character strings) into the system. These keys are entered using the Feature Keys Menu.

De-Activating Feature Options

As application requirements change, you may need to de-activate a Feature Key option in order to activate another option or to perform necessary testing. These feature sets are de-activated by using the Feature Keys Menu to toggle the status of a Feature Key between Active and Inactive.

To de-activate feature options, follow the procedure below.

1. From the DNX-1u Main Menu, click on **About** and then on **Feature Keys**.

   The Feature Keys Menu is displayed.

   Note: *High Availability, APS and Enhanced T1/CSU are mutually exclusive and cannot be active at the same time.*

2. Move your cursor to the option you want to de-activate. In order to de-active an option is must be currently *Active*. Press **Enter** to toggle this feature from *Active* to *Inactive*.

3. Check to ensure the word *"Inactive"* is now displayed next to your specific options.

4. Press **X** to save this configuration.

   A message is displayed asking if you want to update the configuration.

5. Press **Y** to update the configuration and de-activate the selected Feature Key.

   You are returned to the About Menu.

Deleting Feature Options

As application requirements change, you may need to delete a Feature Key in order to activate another option. These feature sets are deleted using the Feature Keys Menu.

To delete feature options, follow the procedure below.

1. From the DNX-1u Main Menu, click on **About** and then on **Feature Keys**.

   The Feature Keys Menu is displayed.

   Note: *High Availability, APS and Enhanced T1/CSU are mutually exclusive and cannot be active at the same time.*

2. Move your cursor to the option you want to delete and press **D**.

   A the field for the selected option changes from *Active* or *Inactive* to *Key Needed*.

3. Press **K**.

   The Feature Key Entry Menu is displayed.

4. Press **Enter**.

   The cursor is displayed on an empty line.

5. Type in the software key number (found on the label contained in the DNX-1u packaging) exactly as written and then press **Enter** to store.

6. Press **Y** to update the configuration and delete the Feature Key.

   A message is displayed indicating this change could involve a change to the connection maps.

7. Press **Y** to continue.

   A message is displayed indicating that this action will change the default configurations and reset the system.

8. Press **Y**.

   A message is displayed asking if you want to preserve IP information.

9. Press **Y**.

   The system IP configuration will be preserved and the system will be reset. If you were accessing the system remotely, a management connection will need to be re-established.

Upgrading Software and Feature Keys

When upgrading/switching the DNX-1u software version to a different release, it is possible under certain conditions to have two mutually exclusive Feature Options Keys enabled at the same time. In this case, the earlier software version is not aware of the new Feature Option Key and as a result will not display a warning message about conflicting keys. If a newer Feature Option Key is already enabled and an older, mutually exclusive key is automatically enabled again once the older software version is loaded, the system will not display a warning message. However, each Feature Option Key is enabled only for the release currently loaded on the system and will not be activated with any keys activated upon loading a different software version on the system.

If one of these conditions occurs, the system will generate one of the following events in the System Event Log:

‘Keys Error: APS and T1/CSU both active’, or

‘Keys Error: High Availability and APS both active’, or

‘Keys Error: High Availability and T1/CSU both active’

In order to correct this problem, the user must disable the Feature Option Key that is not supported by the active software version.

THIS PAGE INTENTIONALLY LEFT BLANK.

Section 3
System Management

System Management Methods

The DNX-1u system can be managed using the following *four* methods:

- System Management using a Craft Terminal connected to the DNX-1u Craft port
- System Management using a Telnet Session access from a PC or workstation using an Ethernet Local Area Network (LAN)
- Telnet access using System Management using a WAN Management Channel
- System Management using SNMP (V1 and V2.0c) access from an Element Management System, such as Sycamore Network's ENvision EMS or ENvision Plus NMS products.

Table 3-1: *System Management Methods*

	Management Technique		
	Craft Terminal	**Telnet Session**	**SNMP**
Access Method	Direct connection to Craft port using RJ-45 connector	Network using any of eight Ethernet ports	Network using any of eight Ethernet ports
Maximum Number of Sessions	1	8	Unlimited (suggested maximum of 5)
Management Method	Embedded Menus and CLI (Router Subsystem only)	Embedded Menus and CLI (Router Subsystem only)	SNMP (V1 and V2.0c)

System Management using a Craft Terminal

The Craft port is located on the connector panel, at the top left of the Asynchronous Port Block. The Craft port is used to connect a local Craft terminal console to manage and control the DNX-1u from the immediate location. The Craft terminal can be a PC, workstation, or a dedicated terminal console. Access to the DNX-1u is password-protected after a login and password is established. Typically, the Craft terminal will be used in the installation process to set up basic DNX-1u parameters before turning control over to a Network Operations Center (NOC). The NOC can then perform additional configuration of system and port parameters, monitor the network, and perform diagnostics. Connection to the NOC will be from a Telnet session or an SNMP-based element management system.

Connecting the Console

The cable that attaches to the terminal should be installed and connected at your site. Sycamore Networks provides a console cable with the unit; however, you need to build a customized cable, refer to Table 3-2 for cabling and pinout guidance.

Table 3-2: *Craft Port Pinouts*

Serial Connector RJ-45 Female	Port Pins	Common Description	DNX-1u In/Out
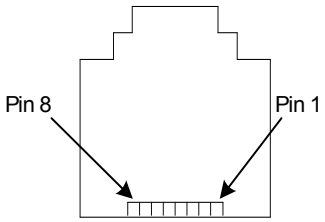	1	DSR (Data Set Ready)	Output
	2	CD (Carrier Detect)	Output
	3	DTR (Data Terminal Ready)	Input
	4	GROUND	GROUND
	5	Rx Data (Receive Data)	Output
	6	Tx Data (Transmit Data)	Input
	7	CTS (Clear to Send)	Output
	8	RTS (Request to Send)	No Connect

Connecting the CRAFT Port

To connect the CRAFT port, follow the procedure below.

1. Locate the port labeled “CRAFT” on the connection panel, and connect the RJ-45 connector on the interface cable to it (see Figure 3-1) and connect the other end to your PC or Terminal.

Figure 3-1: *Connecting the Craft Terminal*

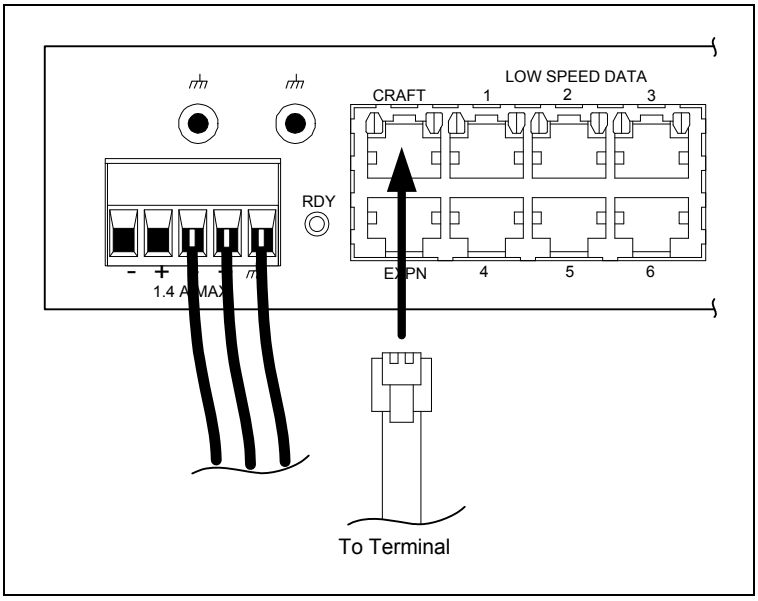

2. Activate your terminal and configure terminal communications parameters as follows:
   - **Data Rate:** 1200, 2400, 4800, 9600 or 19200 bps (9600 recommended)
   - **Data Bits:** 8
   - **Stop Bit:** 1
   - **Parity:** None
   - **Flow Control:** None

Note: *Some terminal manufacturers might identify the data bit configuration as 7-N-1 (seven data bits plus a “no” parity bit) while other manufacturers might identify the same configurations 8-N-1 (eight bits including a “not used” parity bit). Check the terminal’s user manual.*

3. Log into the console/Craft port. Refer to the next procedure, Logging into the DNX-1u & Setting User IDs and Passwords.

Logging into the DNX-1u & Setting User IDs and Passwords

To login to the DNX-1u and set user IDs and passwords, follow the procedure below.

1. Once the Craft port cable is installed, power up the terminal and the DNX-1u.

2. Wait until the DNX-1u is finished initializing, then press **Enter** on your terminal keyboard to activate automatic baud rate recognition.

3. Since this is the first time the system is logged into, or if there are no user IDs created on the system, the login and password will be blank. Press **Enter** when prompted.

   Note: *Once a login name and password is established, the default login (Enter) is no longer valid. The Admin user level* ***must*** *be assigned to the first user added on the Users Profile Menu. If this is not done, you will not be able to configure additional users.*

   If the DNX-1u System Manager cannot automatically detect your terminal type, the Terminal Selection Menu is displayed.

Figure 3-2: *Terminal Selection Menu*

```
login:
password:

WELCOME...
Fri, Apr 27, 2007 10:19:10am
 os:  4.0



Terminal types supported:

(1)  ADDS Regent 25            (11)  Hazeltine 1500
(2)  ADDS Viewpoint            (12)  IBM 3101
(3)  Attis 4410/4425           (13)  ICL 6401
(4)  Data General DASHER       (14)  LSI ADM 11/31
(5)  Datamedia 1521            (15)  Paradyne 7811
(6)  Datamedia EXCEL 30        (16)  Qume QVT-101/102/108
(7)  Datamedia EXCEL 42        (17)  Teletype 5410/5425
(8)  DEC VT-52                 (18)  Televideo 900
(9)  DEC VT-100/131/220        (19)  Wyse WY-50
(10) Freedom 100               (20)  Wyse WY-75

Enter your terminal type [1..20]...
```

4. Select your terminal type from the list.

   Once the terminal type is automatically detected or manually selected, the DNX-1u Main Menu is displayed.

Figure 3-3: *DNX-1u Main Menu*

```
System ID: DNX-1u No. 1                                          Help = [?]
Sycamore Networks, Inc.            DNX-1u

                                 Main Menu



                           Status and Diagnostics
                           Connection Maps
                           Configuration
                           Events
                           Utilities
                           About
```

5. From the DNX-1u Main Menu, click on **Configuration** and then on **Users Profile**.

   The Users Profile Manager Menu is displayed.

6. Press **A** to add a user to configure at least one user ID at the Admin access level.

   The User Configuration Menu is displayed.

7. Enter your login name, password, and other associated data as well as a security level. For information on these fields, refer to the following section *Field Descriptions*.

8. When complete press **X** to save this profile.

   A message is displayed asking if you want to update the configuration.

9. Press **Y**.

   The new user is added.

Note: *An Administrator can add up to 20 different users; duplicate names are not accepted. You must exit the user profile screen in order for the changes to take effect.*

Field Descriptions

Table 3-3 lists the field descriptions to configure a user profile.

Table 3-3: *User Configuration Menu Fields*

Field	Description
Name: *(text field)*	Specifies a user name, up to 11 alphanumeric characters that will display on the Users Profile Manager Menu. User names are case-sensitive.
Audit Trail Identifier: *(text field)*	Specifies an ID, up to three alphanumeric characters, to be used in the event log to identify the user who initiated a specific audit trail events. Adding, deleting, or changing a user configuration is considered an audit trail event. An audit trail event message starts with the three-character audit trail identifier and then **>>** to indicate it is an audit trail message. This three-character identifier also displays in the ID header field on the Users Profile Manager Menu.
Contact: *(text field)*	Specifies contact information for the user, up to 31 alphanumeric characters, such as phone number or e-mail address.
Password: *(text field)*	Enter a password of at least six (and up to 11) alphanumeric characters; otherwise, n error will occur upon exit. Passwords are case-sensitive and do not display on any menu.
Confirm Password: *(text field)*	This field is used to confirm the password entered in the *Password* field.
Security Level: *(option field)*	Select the security level for DNX-1u users, which is configured through the *U*ser Configuration Menu. A user's security level displays in the right header field on the Users Profile Manager Menu. Refer to the User Security System Chart (Table 4-14) for more information on security levels. • *Admin* - The highest level of access. Users at this level can access all DNX-1u functions and can add/remove users from the system. This user is not able to view another user's password, but can delete and add new passwords in the event a user has forgotten his password. • *Provision* - Users at this level can make configuration changes, run diagnostic tests, and do everything that an Administrator can do except add/delete users, change passwords, or download software. • *Test* - Users at this level have all of the privileges of a View Only user, plus the ability to perform testing, such as initiating/terminating BERT tests and loopbacks, and clearing performance registers. • *View Only* - Users at this level can view some system settings, options, and alarm information but cannot change any settings.
Shell Type: *(option field)*	Select the type of interface the user will use to communicate with the DNX-1u and Router Subsystem. The choices are: Menu system or Command Line Interface (CLI). ***Note:*** *CLI should only be used by someone familiar with the commands. If a user logs into the system and the command line is displayed, type the word* **menu** *and press* **Enter** *to access the menu system.*

Note: *For more details on security levels refer to Table 4-14 on page 4-39.*

Embedded Menus

The DNX-1u supports an intuitive embedded menu system to facilitate the administration, provisioning, testing and viewing of system resources and supported user traffic. From the DNX-1u Main Menu, the following submenus can be accessed:

- **Status and Diagnostics** - Provides high-level status information and access to diagnostics features.
- **Connection Maps** - Provides for the definition and control of the three cross-connect maps supported by the DNX-1u.
- **Configuration** - Provides access to fundamental system-level parameters.
- **Events** - Provides the ability to view event log entries and to redirect them to a configurable syslog.
- **Utilities** - Provides the methods to manage database operations, access Router utilities, manage software and re-initialize system resources.
- **About** - Provides basic information about the DNX-1u software and the current session's user information.

DNX-1u Menu Navigation

The DNX-1u user interface uses *four* types of screens:

- **Menus -** Choose a menu item, return to a previous menu, or select a command listed at the bottom of the screen.
- **Menus with fields -** Enter information.
- **Displays -** Read-only screens that display information.
- **Prompts -** Screens that confirm a user action by indicating a **Y**es or **N**o answer.

There are *three* types of fields that display on DNX-1u menus:

- **Option fields -** These fields contain a list of the valid entries. In these fields, scroll through the options until the option you want is displayed on the screen, then move to the next field.
- **Text fields -** These fields require you to press **Enter**, type in an entry, press **Enter** again, then move to the next field.
- **Display fields -** Read-only fields that display information.

Table 3-4: *Menu Navigation*

Action	Key
NAVIGATION WITHIN MENUS	
Move forward to the next field	**SPACEBAR** or ↓ (Down Arrow)
Move backward to the previous field	**BACKSPACE** or ↑ (Up Arrow)
Save changes on screen and exit to previous menu	**X** then type **Y** when prompted with “Update Configuration? Are you sure (Y/N)?”
Exit to previous menu without saving changes	**Esc Esc**, then type **Y** when prompted with “Abort edits? Are you sure (Y/N)?”
Select the current option	Press **Enter**
Return to the previous menu	**X** or **Esc Esc**
To access the Help screen	Press**?** key
Select a command listed at the bottom of the screen type the letter indicated in brackets	Type the letter indicated in brackets
NAVIGATION WITHIN FIELDS	
Option Fields: Scroll to the next option Scroll to the previous option	 **Enter** **B**
Text Fields: Enter text Clear changes and revert to last saved entry Erase characters	 Press **Enter**. When the line is displayed, type the new text, then press **Enter** again **Esc Esc** **BACKSPACE** or ↑ (Up Arrow)

Note: *To activate the values that you enter or select on the configuration screens, you must exit the screen. Diagnostic parameters are not always activated as soon as you change the value on the screen. For example, loops and Bit Error Rate Tests (BERTs) are activated only by changing the option, exiting and saving the change.*

Help ? Menu

For help navigating around in the menus, press the **?** key from any screen. The Help Menu (Figure 3-4) is displayed.

Figure 3-4: *Help Menu*

```
*********************************************************************
*                            - HELP <?> -                           *
*                                                                   *
*  To select any menu or field on any screen, position the cursor   *
*  on the entry and press <RETURN>.                                 *
*                                                                   *
*  CURSOR MOVEMENT                                                  *
*      Move forward                      = <SPACE> / <Down Arrow>   *
*      Move backward                     = <BACKSPACE> / <Up Arrow> *
*                                                                   *
*  FIELD CHANGE                                                     *
*      Options field: Scroll forward     = <RETURN>                 *
*                     Scroll backward    = <B>                      *
*                                                                   *
*      Text field:    Update entry       = <RETURN>                 *
*                     Recall last entry  = <ESC>                    *
*                                                                   *
*  SCREEN EXIT                                                      *
*      Save any changes                  = <X>                      *
*      Abort all changes                 = <ESC> <ESC>              *
*                                                                   *
*                     - Press any key to exit -                     *
*                                                                   *
*********************************************************************
```

System Management using a Telnet Session

The DNX-1u supports the use of Telnet management sessions. Telnet is a protocol that allows one or more users to log onto a remote host, in this case the DNX-1u. It creates a Network Virtual Terminal (NVT) across the internetwork so that it displays as if you are logged directly into the Craft port. The system supports up to eight simultaneous Telnet sessions at any given time.

Note: *To Start the Telnet Application, your IP Address must already be established: See Router or Installation Section for details on how to configure the unit's IP address. The DNX-1u also supports Reverse Telnet. For more information, refer to "Reverse Telnet" in Section 5.*

Note: *The default timeout for a Telnet session is 10 minutes.*

CAUTION

The DNX-1u Ethernet port is for Intra-office use only as specified in IEEE 802.3. If the DNX-1U is used for inter-office (building) applications an Ethernet surge suppression device is required to provide isolation for the DNX-1U Ethernet ports.

Logging into the DNX-1u

To log into the DNX-1u using a telnet session, follow the procedure below.

1. Start a Telnet session and enter the IP address of the DNX-1u.

   Note: *Knowledge of the various security levels is necessary before attempting multiple Telnet sessions. Refer to "System-Level Configuration" in Section 4 for a full description of security levels.*

2. When prompted, enter your login name and password.

   The DNX-1u Main Menu is displayed.

   Note: *With the exception of security level View-only, the first user to Telnet into the DNX-1u will have read/write access. Subsequent Telnet sessions - regardless of their security level - will have read/write access to all subsystems with the exception of SYNC and T1/E1 subsystems. The tables below describe how multiple Telnet sessions work*

Multiple Telnet Sessions

In the example below, the initial user has a security level of Administrator. This user has full read/write access. Subsequent users, with the exception of Administrator, will have read-only access to the system.

Table 3-5: *Example - Multiple Telnet Sessions (Administrator as Initial User)*

Telnet Session	**#1**	**#2**	**#3**	**#4**	**#5**	**#6**	**#7**	**#8**
Security Level (privileges)	Admin (read/write)	Provision (read-only)	Admin (read/write)	Admin (read/write)				

In this example, the initial user has a security level of View-only and is restricted to read-only status. The second user has a Provisioning security level and has read/write access. The third user, Administrator, has read/write access.

Table 3-6: *Example - Multiple Telnet Sessions (View-Only as Initial User)*

Telnet Session	**#1**	**#2**	**#3**	**#4**	**#5**	**#6**	**#7**	**#8**
Security Level (privileges)	View-only (read-only)	Provision (read/write)	Admin (read/write)	Admin (read/write)				

Maximum Sessions

A maximum of eight sessions can be connected to the DNX-1u at one time.

Multiple Connection Attempts

When multiple connection attempts are made to the same local IP address and port, the DNX-1u does not differentiate between connections to Reverse Telnet addresses and other addresses. As a result, the failed login attempt is not generated in the Event log or Syslog.

View-Only Access (Locked out by Another User)

A “locked” message is displayed when you attempt to enter a menu that is already occupied by a previous user with write access. When the “locked” message is displayed, as shown in Figure 3-5, press **Enter** to proceed as a View-only user.

Figure 3-5: *View-Only Access Screen*

```
System ID: default name Unit #1                                    Help = [?]
Sycamore Networks, Inc.              DNX-1u


                              Configuration Menu

   ************************************************************************
   *                                                                      *
   *                        -Hit any key to continue-                     *
   *                                                                      *
   *                                                                      *
   *  This screen is Locked by - DefaultUser -. Activating View Only Access*
   *                                                                      *
   *                                                                      *
   *                                                                      *
   *                                                                      *
   ************************************************************************
```

DNX-1u Menu Navigation

The DNX-1u user interface has *four* types of screens:

- **Menus** - Choose a menu item, return to a previous menu, or select a command listed at the bottom of the screen.
- **Menus with fields** - Enter information.
- **Displays** - Read-only screens that display information.
- **Prompts** - Screens that confirm a user action by indicating a a **Y**es or **N**o answer.

There are *three* types of fields that display on DNX-1u menus:

- **Option fields** - These fields contain a list of the valid entries. In these fields, scroll through the options until the option you want displays on the screen, then move to the next field.
- **Text fields** - These fields require you to press **Enter**, type in an entry, press **Enter** again, then move to the next field.
- **Display fields** - Read-only fields that display information.

Table 3-7: *Menu Navigation*

Action	Key
NAVIGATION WITHIN MENUS	
Move forward to the next field	**SPACEBAR** or ↓ (Down Arrow)
Move backward to the previous field	**BACKSPACE** or ↑ (Up Arrow)
Save changes on screen and exit to previous menu	**X** then type **Y** when prompted with “Update Configuration? Are you sure (Y/N)?”
Exit to previous menu without saving changes	**Esc Esc**, then type **Y** when prompted with “Abort edits? Are you sure (Y/N)?”
Select the current option	Press **Enter**
Return to the previous menu	**X** or **Esc Esc**
To access the Help screen	Press**?** key
Select a command listed at the bottom of the screen type the letter indicated in brackets	Type the letter indicated in brackets
NAVIGATION WITHIN FIELDS	
Option Fields: Scroll to the next option Scroll to the previous option	 **Enter** **B**
Text Fields: Enter text Clear changes and revert to last saved entry Erase characters	 Press **Enter**. When the line displays, type the new text, then press **Enter** again **Esc Esc** **BACKSPACE** or ↑ (Up Arrow)

Note: *To activate the values you entered or selected on the configuration screens, you must exit the screen. Diagnostic parameters are not always activated as soon as you change the value on the screen. For example, loops and BERTs are activated only by changing the option, exiting and saving the change.*

Help ? Menu

For help navigating around in the menus, press the **?** key (on your keyboard) from any screen. The Help Menu (Figure 3-6) is displayed.

Figure 3-6: *Help Menu*

```
*********************************************************************
*                            - HELP <?> -                           *
*                                                                   *
*  To select any menu or field on any screen, position the cursor   *
*  on the entry and press <RETURN>.                                 *
*                                                                   *
*  CURSOR MOVEMENT                                                  *
*      Move forward                      = <SPACE> / <Down Arrow>   *
*      Move backward                     = <BACKSPACE> / <Up Arrow> *
*                                                                   *
*  FIELD CHANGE                                                     *
*      Options field: Scroll forward     = <RETURN>                 *
*                     Scroll backward    = <B>                      *
*                                                                   *
*      Text field:    Update entry       = <RETURN>                 *
*                     Recall last entry  = <ESC>                    *
*                                                                   *
*  SCREEN EXIT                                                      *
*      Save any changes                  = <X>                      *
*      Abort all changes                 = <ESC> <ESC>              *
*                                                                   *
*                     - Press any key to exit -                     *
*                                                                   *
*********************************************************************
```

Users Submenu

The Users submenu is used to access the Users Profile Manager Menu and allows the Administrator to add, change, or delete user information. In addition, this menu allows the Administrator to set user security levels.

Accessing the User Profile Manager Menu

To access the User Profile Manager Menu, follow the procedure below.

1. From the DNX-1u Main Menu, click on **Configuration** and then on **Users Profile**.

   The Users Profile Manager Menu is displayed.

2. For each user, the menu displays the following:

   - **Name**
   - **Audit trail identifier (Id)** - Can be used for security purposes to identify the user operating the system. The Audit Trail Id is displayed in the Event Log on the System Events submenu.
   - **Assigned rights (Rights)**
   - **Login status (Status)**

   All passwords are encrypted and not shown.

Note: *Each field is described in more detail in Table 4-13 on page 4-37.*

Adding a User

To add a user, follow the procedure below.

1. From the Users Profile Manager Menu, press **A** to add a user.

   The User Configuration Menu is displayed.

2. Enter the information for the user. When complete press **X** to save this profile.

   A message is displayed asking if you want to update the configuration.

3. Press **Y**.

   The new user is added.

Note: *An Administrator can add up to 20 different users; duplicate names are not accepted. You must exit the user profile screen in order for the changes to take effect.*

Modifying a User

To modify user information, follow the procedure below.

1. From the Users Profile Manager Menu, cursor to a user name and press **Enter**.

   The User Configuration Menu is displayed.

2. Change the specific user information. When complete press **X** to save this change.

   A message is displayed asking if you want to update the configuration.

3. Press **Y**.

   The selected user is modified.

Note: *An Administrator can change any information associated with a Login Name, including the password. The Login Name cannot be changed once entered. Instead, the Administrator must delete the login and then enter a new login name.*

Deleting a User

To delete a user, follow the procedure below.

1. From the Users Profile Manager Menu, cursor to a user name and press **D** to delete the user.

   A message is displayed asking if you want to delete this user.

2. Press **Y** to delete the selected user.

   The selected user is deleted.

You must exit the Users Profile Manager Menu in order for the changes to take effect.

Note: *Only an Administrator can delete a user.*

System Management using a WAN Management Channel

The DNX-1u can also use a T1/E1 timeslot to manage the DNX-1u using Telnet IP commands, by mapping the T1/E1 timeslot to a WAN management channel (Virtual WAN port).

Table 3-8: *WAN Management Channel*

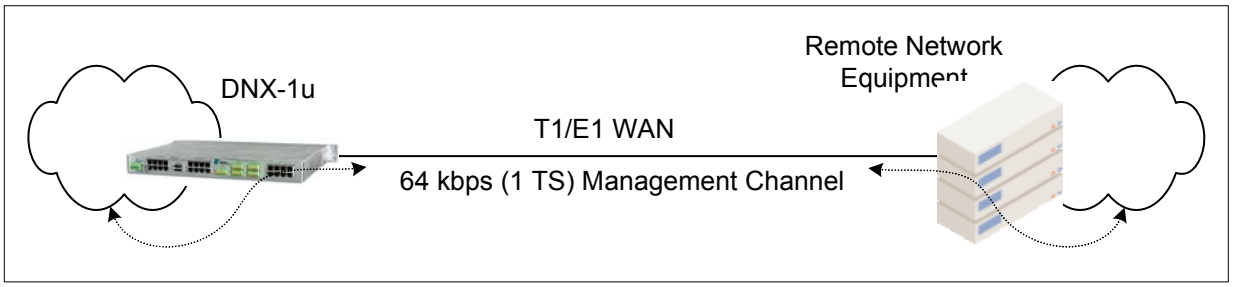

Setting up a WAN Management Channel

The DNX-1u can be configured to be managed by IP commands using a connection mapped to a virtual WAN port. The first step in the configuration process is to set up a WAN port for the router as shown below. An un-numbered interface and static routing is used in this in this example. A single 64 kbps timeslot for the WAN is used; if you need a larger bandwidth, just increase the number of timeslots. Before you start, you must know what the IP address will be for the device at the other end of the WAN link - and that IP address must be on a different subnet than the DNX-1u's Ethernet port.

Note: *This procedure assumes that you have already set up a unit IP address, a T1/E1 link, and a Virtual WAN port to be used for the management interface.*

1. Once the Craft port cable is installed, turn on the terminal and the DNX-1u.
2. Connect to DNX-1u management either using Craft port or Telnet with a LAN port.
3. To Map the connection, from DNX-1u Main Menu, click on **Connection Maps** and then on **Active Map**.

   The Map Configuration screen is displayed.
4. Press **A** to add a new connection map entry.
5. Assign a brief connection name to describe the new connection by highlighting the field and pressing **Enter**.
6. Populate this screen with the following information:
   - **SRC Subsystem:** 03 - Router
   - **SRC Starting Ts:** (matches the WAN Virtual port)
   - **DEST Subsystem:** 01 - T1E1-A or 02 - T1E1-B
   - **SRC Starting Ts:** (specified T1/E1 timeslot)
   - **Speed:** 64k (1TS)
7. When complete, press **S** to save the connection.
8. You can view the timeslot allocation map if needed; however, this step is not necessary.
9. Press **X** to back up until you are at the Main Menu.

System Management using SNMP

In addition to the embedded menu system, an SNMP (Simple Network Management Protocol) Agent allows the DNX-1u to be configured and managed using an Element Management System (EMS) or Network Management System (NMS) program running on one or more computers anywhere in the network. The Sycamore Network's ENvision EMS and ENvision Plus NMS products are examples of such Management Systems.

For details on configuring the SNMP Agent refer to "SNMP Agent Configuration" on page 4-30.

For details on configuring the DNX-1u to for management using ENvision Plus, refer to "ENvision Plus Configuration" on page 4-41.

THIS PAGE INTENTIONALLY LEFT BLANK

Section 4
System-Level Configuration

Configuration Menu

System-level configuration can be performed from the Configuration Menu, which provides access to several submenus to configure DNX-1u system parameters. Depending on which Feature Option Keys are active for your system, the Configuration Menu may include the following optional items:

- **Link APS Threshold Profiles**—For systems with the AP Feature Option Key, which allows for T1 or E1 1+1 or 1:1 Automatic Protection Switching (APS). See "Link APS Threshold Profiles" on page 4-5 for more details.
- **Protection Groups**—For systems with the High Availability (HA) Feature Option Key, which provides High Availability Circuits (HAC) T1 1+1 Circuit Protection Groups. See "Protection Groups Threshold Configuration (HAC)" on page 4-9 for more details.
- **Link Threshold Profiles**—For systems with the Enhanced T1/CSU (EC) Feature Option Key, which allows for T1 CSU operation with configurable alarming. (Available for Release 3.5 FP1/3.5 FP2 only.) See "Link Threshold Profiles (Enhanced T1/CSU) Configuration" on page 4-13 for more details.

Note: *Refer to Section 5, "Subsystem-Level Configuration" for information on the Subsystem Profile Menu.*

The Configuration Menu is illustrated in Figure 4-1.

Figure 4-1: *Configuration Menu Structure*

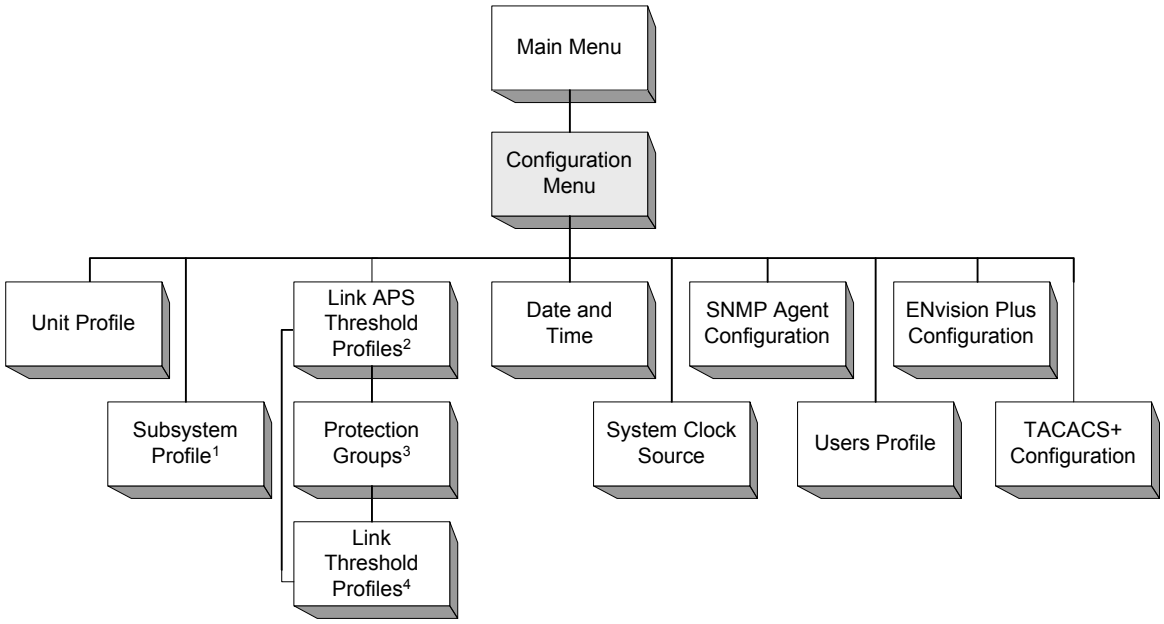

[1] Covered separately in Section 5.
[2] This menu is available to systems with the APS Feature Option Key.
[3] This menu is available to systems with the HAC Feature Option Key.
[4] This menu is available to systems with the EC Feature Option Key.

Unit Profile

DNX-1u unit-level configuration can be performed from the Unit Profile Configuration Menu, which is used to set up the DNX-1u on a system level.

Navigation:
DNX-1u Main Menu ↓ Configuration ↓ Unit Profile

Configuring a Unit Profile

To configure a Unit Profile, follow the procedure below.

1. From the DNX-1u Main Menu, click on **Configuration** and then on **Unit Profile**.

   The Unit Profile Configuration screen is displayed.

Figure 4-2: *Unit Profile Configuration Menu*

```
System ID:                                                    Help = [?]
Sycamore Networks, Inc.              DNX-1u

                                 Unit Profile Configuration




Unit Number..........: 1
Unit Name (System ID): default name Unit #1
Unit type:...........: DNX-1u
Operation Mode.......: T1

Expansion Unit........: Disabled
National Bit Pass-Thru for T1E1-A Links 1 & 2: No
Suppress Lower Level Alarms When In RED Alarm: No
```

2. Populate this screen with specific unit profile information. For information on these fields, refer to the following section *Field Descriptions*.
3. When complete press **X**.

   A message is displayed asking if you want to update the configuration.
4. Press **Y**.

   The changes are saved.

Field Descriptions

Table 4-1 lists the field descriptions to configure a Unit Profile.

Table 4-1: *Unit Profile Configuration Menu Field Descriptions*

Field	Description
Unit Number: *(display field)*	Displays the unit number of the DNX-1u. Currently set at *1*, and not configurable. A future the Expansion Unit could be displayed as unit *2*.
Unit Name (System ID): *(text field)*	Identifies the name of the DNX-1u system, up to 30 alphanumeric characters.
Unit Type: *(display field)*	Displays the type of DNX-1u equipment. Currently set at *DNX-1u*, and not configurable.
Operation Mode: *(option field)*	Sets the operating mode of the T1/E1 Subsystem links as either *T1* or *E1*. ***Note:*** *T1/E1 ports are configured on a* ***system-wide basis*** *for either T1 or E1 operation and not a mixture of T1 and E1 traffic.*
Expansion Unit: *(option field)*	Allows the DNX-1u to be *Enabled* or *Disabled* for Expansion Unit use (Future). Currently set at *Disabled*, and not configurable.
National Bit Pass-Thru for T1E1-A Links 1 & 2: *(option field)*	Allows the Transparent/Pass-thru National Bit Mode to be enabled (set to *Yes*) or disabled (set to *No*). ***Note:*** *Once the Transparent Mode is enabled and an Nx56k/64k connection is made between the two T1E1-A E1 links 1 and 2, the system will make a TS0 connection internally between T1E1-A links 1 and 2 to pass through the National Bits. If the Transparent Mode is disabled, the TS0 connection will be removed and the National Bits will no longer be passed transparently between the two links.*
Suppress Lower Level Alarms When In RED Alarm (*option field*)	Allows lower level alarms to be suppressed (set to *Yes*) for a specific T1/E1 link in Red Alarm or disabled (set to *No*).

Link APS Threshold Profiles

The information provided in this section applies to systems with the AP Feature Option Key, which allows for T1 or E1 1+1 or 1:1 Automatic Protection Switching (APS).

Up to eight Link APS Threshold Profiles can be established to define the link status criteria necessary to cause a T1 or E1 Working Link to switch over to the Protection Link.

Note: *High Availability, APS and Enhanced T1/CSU are mutually exclusive and cannot be active at the same time.*

Note: *If the T1/CSU or APS Feature Keys are active, the "Link Down On Yellow" and "Switch On Yellow" and "Link Down on AIS" and "Switch On AIS" Link Threshold Profile fields will control if Trunk Conditioning is triggered on the link in response to these alarms.*

Navigation:
DNX-1u Main Menu ↓ Configuration ↓ Link APS Threshold Profiles

Configuring a Link APS Threshold Profile

To configure a Link APS Threshold Profile, follow the procedure below.

1. From the DNX-1u Main Menu, click on **Configuration** and then on **Link APS Threshold Profile**.

   The Link APS Threshold Profiles screen is displayed.

Figure 4-3: *Link APS Threshold Profiles Screen*

```
System ID: DNX-1u No. 1                                          Help = [?]
Sycamore Networks, Inc.               DNX-1u


                          Link APS Threshold Profiles

    Identification     Name
    --------------     ----
    1                  profile 1
    2                  profile 2
    3                  profile 3
    4                  profile 4
    5                  profile 5
    6                  profile 6
    7                  profile 7
    8                  profile 8




[Enter] to set profile
E[x]it to update changes
```

2. Move your cursor to the profile you want to configure and press **Enter**.

   The Threshold Configuration screen is displayed.

Figure 4-4: *Threshold Configuration Screen*

```
System ID: DNX-1u No. 1                                          Help = [?]
Sycamore Networks, Inc.               DNX-1u
                            Threshold Configuration
Identification: 1
Name..........: profile 1
---------------------------------------------------------------
Link Down Criteria                      Link Up Criteria
------------------                      ----------------
Hard Faults CES..:1                     HF Consecutive Error Free Seconds:1
Soft Faults SES..:101                   SF Consecutive Error Free Seconds:1
Soft Faults CSES..:101                  Revertive Threshold [CEFS]: 1
Switch on AIS....:Enable
Switch on Yellow.:Disable
                              Link Alert Criteria
#   ES Count             Interval(HH:MM)     Severity
--  --------             ---------------     --------
1.  0                        0  :00          Alarm
2.  0                        0  :00          Alarm
3.  0                        0  :00          Alarm
CES:  Consecutive Errored Seconds
SES:  Severely Errored Seconds
CSES: Consecutive Severely Errored Seconds
```

3. Populate this screen with specific threshold information. For information on these fields, refer to the following section *Field Descriptions*.
4. When complete press **X**.

   A message is displayed asking if you want to update the configuration.
5. Press **Y**.

   The changes are saved.

Field Descriptions

Table 4-2 lists the field descriptions to configure Link APS Threshold Profiles.

Table 4-2: *Link APS Threshold Profile Configuration Field Descriptions*

Field	Description
Identification: *(display field)*	Displays a number (*1-8*) that identifies the current profile being configured.
Name: *(text field)*	Identifies the name of the selected profile, up to 19 characters.
LINK DOWN CRITERIA	
Hard Faults CES: *(text field)*	Designates the number of Consecutive Errored Seconds (CES) that must occur before a Hard Fault is declared. Input a time from *1-255* seconds. The default is *1* second.
Soft Faults SES: *(text field)*	Defines the number of soft faults - Cyclic Redundancy Check (CRC) or Bipolar Violations (BPV) that must occur before a Severely Errored Second (SES) is declared. This definition of an SES is applies when tallying Consecutive Severely Errored Seconds (CSES) for possible link switchover. Values are from *1* to *1000*. The default is *101*.
Soft Faults CSES: *(text field)*	Defines the number of Consecutive Severely Errored Seconds that must occur before the link is declared down. Input a time from *1-20* seconds. The default is *10* seconds.
Switch on AIS: *(option field)*	Used to *Enable* or *Disable* automatic switchovers when an Alarm Indication Signal (AIS) is detected for more than 140 msec.
Switch on Yellow: *(option field)*	Used to *Enable* or *Disable* automatic switchovers when a Yellow Alarm is detected for more than 140 msec.
LINK UP CRITERIA	
Consecutive Error Free Seconds: *(text field)*	Designates the number of Consecutive Error-Free Seconds that must occur before the link is declared up (operational). Input a time from *1-255* seconds; the default is *1* second.
Revertive Threshold [CEFS]: *(text field)*	When Revertive Mode is enabled and a protection link is active, designates the number of Consecutive Error-Free Seconds that must occur before the protection link is switched back to the Working Link. Input a time from *1-7200* seconds. The default is *1* second.
LINK ALERT CRITERIA ***Note:*** *The following fields are described in more detail in the following section, "Special Instructions for Link Alert Monitoring in Link APS Mode" on page 4-8.*	
# 1-3	Identifies each one of the three sets of link alert parameters.
ES Count: *(text field)*	Designates the number of Errored Seconds that must occur in the time specified in the *Interval* field before the action that is set up in the *Action* field will be initiated. Input a count from *0-255* seconds.
Interval(HH:MM): *(text /option field)*	Designates the time frame in which the number of errored seconds specified in the *ES Count* field must occur before the action that is set up in the *Action* field will be initiated. This is actually a two-part field, where you can enter a number of hours from *0-24*, then select the number of minutes in 15-minute increments.
Severity: *(option field)*	Designates whether an *Alert* (Info) or *Minor Alarm* trap is sent when the configured number of Errored Seconds occur within the time frame specified in the *Interval* field.

Special Instructions for Link Alert Monitoring in Link APS Mode

The Link Alert Feature enables users to monitor the health of links and automatically receive notification from the DNX-1u in the event errors are detected within a given time interval. The DNX-1u supports three unique Link Alert Profiles, allowing the user to customize this error reporting mechanism.

Note: *The Link Alert feature applies to both the Link APS and Enhanced T1/CSU Modes of operation. The Enhanced T1/CSU instructions are provided in* *"Special Instructions for Link Alert Monitoring in Enhanced T1/CSU Mode" on page 4-16*.

Link Alert Profiles

The Link Alert Profiles contain *three* configurable parameters:

- Number of Errored Seconds (ES COUNT)
- Specific time period (INTERVAL) in which they are detected
- Notification type (SEVERITY) that specifies whether an Alarm or an Alert is generated.

Table 4-3: *Configuration Options for Link Alert Profiles*

#	ES Count	Interval (HH:MM)	Severity
1	0 to 255	00 to 24: 00,15,30,45	Alarm/Info
2	0 to 255	00 to 24: 00,15,30,45	Alarm/Info
3	0 to 255	00 to 24: 00,15,30,45	Alarm/Info

The *three* Link Alert Profiles define the threshold parameters associated with a link. In order to monitor and generate an alert or an alarm, at least one of the three Link Alert Profiles must be configured. Within each of the three Link Alert Profiles, the following parameters are configurable:

- **ES Count**—This parameter is the threshold number of errored seconds within the user-configured time INTERVAL. If ES COUNT errors are observed within the time INTERVAL, an Alarm/Alert trap is generated. The ES COUNT parameter is configurable in the range of 0 to 255 Errored Seconds.
- **INTERVAL**—This parameter is a sliding window in 15-minute increments. The INTERVAL parameter is configurable in Hours and Minutes in the range of 00 to 24 hours and 15-minute increments 00, 15, 30, and 45.
- **SEVERITY**—This parameter is configurable to generate either an Alarm (Severity=Minor Trap) or an Alert (Severity=Informational Trap) when the threshold is met.

The DNX-1u maintains an Error Comparator that holds the number of errors detected during the INTERVAL time period. The Comparator includes the current 15-minute error count plus the number of errors detected during *N*-1 preceding 15-minute increments, where *N* is the number of 15-minute increments required to capture the entire INTERVAL time period. As a new INTERVAL is entered, the “oldest” 15-minute error count is included in the Error Comparator. As errors are detected during the current 15-minute increment, they are added to the Error Comparator in real time.

If ES COUNT errors are observed within the INTERVAL, an Alarm/Alert Set Trap is generated immediately. The Set Trap condition is latched for the remainder of the INTERVAL. At the end of the INTERVAL, a Clear Trap is generated if there is currently a Set Trap latched. As a new INTERVAL is entered, the adjusted Error Comparator is compared to the ES COUNT. If the number of errors still exceeds ES COUNT, a Set Trap is immediately sent. Otherwise, error counting continues in the new time interval.

Protection Groups Threshold Configuration (HAC)

The information provided in this section applies to systems with the High Availability (HA) Feature Option Key, which provides High Availability Circuits (HAC) T1 1+1 Circuit Protection Groups.

Note: *High Availability, APS and Enhanced T1/CSU are mutually exclusive and cannot be active at the same time.*

Navigation:
DNX-1u Main Menu ↓ Configuration ↓ Protection Groups

Configuring a Protection Group

To configure a Protection Group, follow the procedure below.

1. From the DNX-1u Main Menu, click on **Configuration** and then on **Protection Groups**.

   The Protection Groups screen is displayed.

2. Move your cursor to the type of protection group you want to configure and press **C**.

   The Protection Group Configuration screen is displayed.

Figure 4-5: *Protection Group Configuration Screen*

```
System ID:                                                        Help = [?]
Sycamore Networks, Inc.           DNX-1u

                         Protection Group Configuration
Group #.........: 1
Name............: Group 01
Type............: HAC
Service State...: Out Of Service
Revertive Mode..: Disable
Switching Mode..: Auto

               Unit     Subsystem      Port
              -------   ----------    ------
CPE.......:    01        T1E1-A        1
Primary...:    01        T1E1-A        2
Secondary.:    01        T1E1-A        3
```

3. Populate this screen with specific threshold information. For information on these fields, refer to the following section *Field Descriptions*.
4. When complete press **X**.

   A message is displayed asking if you want to update the configuration.
5. Press **Y**.

   The changes are saved.

Field Descriptions

Table 4-4 lists the field descriptions to configure Protection Groups.

Table 4-4: *Protection Groups Field Descriptions*

Field	Description
#: *(display field)*	Displays the index number of the current Protection Group, from *1* to *4*.
Type: *(display field)*	Identifies the type of Circuit Protection Group: • *Not CFG*: Not Configured; empty group record. • *SAC*: Standard Availability Circuits. Link-based protection with system-configured clear channel connections. Requires links designated as Customer Premise Equipment (CPE) and Primary. • *HAC*: High Availability Circuits. Link-based protection with system-configured clear channel connections. Requires links designated as CPE, Primary, and Secondary. • *APS:* Automatic Protection Switching. Connection-based circuit protection for user-configured connections.
Name: *(display field)*	Displays the user-selected name for this Protection Group.
CPE: *(display field)*	Identifies the Unit/Slot/Port configured location of the Group's Customer Premise Equipment (CPE) port.
Primary: *(display field)*	Identifies the Unit/Slot/Port configured location of the Group's Primary Port.
Secondary: *(display field)*	Identifies the Unit/Slot/Port configured location of the Group's Secondary Port. ***Note:*** *This field is not required when the Type is set to Standard Availability Circuits (SAC).*
Service State: *(display field)*	Identifies the Protection Group's configured state as *In Service* or *Out Of Service*.

Configuring Protection Group Thresholds

To configure a Protection Group Threshold, follow the procedure below.

1. From the Protection Groups Menu move your cursor to the group whose threshold you would want to configure and press **T**.

   The Threshold Configuration screen is displayed.

Figure 4-6: *Threshold Configuration Screen*

```
System ID:                                                        Help = [?]
Sycamore Networks, Inc.           DNX-1u

                            Threshold Configuration

Hard Faults (LOS, LOF, AIS)
-----------
Declared After 1   Seconds Of Persistent Fault Condition. Range [1, 10]

Soft Faults
-----------
Severely Errored Second(SES) 101     CRC/BPV Errors per Second. Range [1, 333]
Consecutive Severely Errored Seconds (CSES): 10  Range [1, 20]


#   ES        Interval     Action
    Count     (HH:MM)
--  --------  ----------   -----
1.  5         00:15        Alarm
2.  86        24:00        Alarm
3.  2         00:15        Alert
```

2. Populate this screen with specific threshold information. For information on these fields, refer to the following section *Field Descriptions*.
3. When complete press **X**.

   A message is displayed asking if you want to update the configuration.
4. Press **Y**.

   The changes are saved.

Field Descriptions

Table 4-5 lists the field descriptions to configure Protection Group Thresholds.

Table 4-5: *Protection Group Threshold Configuration Field Descriptions*

Field	Description
Hard Faults Declared After X Seconds of Persistent Fault Condition: *(text field)*	Defines the Group's Hard Fault threshold parameter for the number of consecutive seconds in which Error conditions of LOS, LOF, or AIS are detected. When this condition is met, a Hard Fault is declared. Input a time from *1-10* seconds. The default is *1* second.
Severely Errored Seconds (SES): *(text field)*	Defines the Group's rate for Severely Errored Seconds (SES). The rate is the number of errored bits in a given second which determine a (SES. Input a time from *1-333* seconds. The default is *101* seconds.
Consecutive Severely Errored Seconds (CSES): *(text field)*	Defines the Group's Soft Fault threshold parameter for the number of consecutive seconds in which SES have occurred. When this condition is met, a Soft Fault is declared. Input a time from *1-20* seconds. The default is *10* seconds.
ES Count: *(display field)*	Designates the Group's Errored Second (ES) action threshold for the number of errored seconds are detected within the configured number of intervals. When this condition is met, the configured action for this condition will occur.
Interval(HH:MM): *(display field)*	Designates the Group's Errored Second Interval threshold. Determines the number of 15-minute intervals to accumulate the associated number of errored seconds for this condition.
Action: *(display field)*	Displays the type of Action that will occur when the ES condition is met: • *Alert*: generates the warning Alert trap. • *Alarm*: generates the error Alarm trap.

Link Threshold Profiles (Enhanced T1/CSU) Configuration

The information provided in this section applies to systems with the Enhanced T1/CSU (EC) Feature Option Key, which allows for T1 CSU operation with configurable alarming.

Note: *This feature does not support an E1 configuration.*

Up to eight Link T1/CSU Threshold Profiles can be created to define Link Down and Link Up system states based on hard and soft fault criteria.

Note: *High Availability, APS and Enhanced T1/CSU are mutually exclusive and cannot be active at the same time.*

Note: *If the T1/CSU or APS Feature Keys are active, the "Link Down On Yellow" and "Switch On Yellow" and "Link Down on AIS" and "Switch On AIS" Link Threshold Profile fields will control if Trunk Conditioning is triggered on the link in response to these alarms.*

Navigation:
DNX-1u Main Menu ↓ Configuration ↓ Link Threshold Profiles

Configuring Link Threshold Profiles

To configure Link Threshold Profiles, follow the procedure below.

1. From the DNX-1u Main Menu, click on **Configuration** and then on **Link Threshold Profiles**.

   The Link Threshold Profiles screen is displayed.

2. Move your cursor to the profile you want to configure and press **Enter**.

   The Threshold Configuration screen is displayed.

Figure 4-7: *Threshold Configuration Screen (T1/CSU)*

```
System ID:                                                          Help = [?]
Sycamore Networks, Inc.           DNX-1u
                            Threshold Configuration
Identification: 1
Name..........: profile 1
---------------------------------------------------------------
Link Down Criteria                    Link Up Criteria
------------------                    ----------------
Hard Faults CES..:1                   HF Consecutive Error Free Seconds:1
Soft Faults SES..:101                 SF Consecutive Error Free Seconds:1
Soft Faults CSES.:10
Link Down on AIS....:Disable
Link Down on Yellow.:Disable
                              Link Alert Criteria
#   ES Count             Interval(HH:MM)     Severity
--  --------             ---------------     --------
1.  0                        0  :00          Alarm
2.  0                        0  :00          Alarm
3.  0                        0  :00          Alarm
CES:  Consecutive Errored Seconds
SES:  Severely Errored Seconds
CSES: Consecutive Severely Errored Seconds
```

3. From the Threshold Configuration screen, T1/CSU switchover criteria can be set. For information on these fields, refer to the following section *Field Descriptions*.
4. When complete press **X**.

   A message is displayed asking if you want to update the configuration.
5. Press **Y**.

   The changes are saved.

Field Descriptions

Table 4-6 lists the field descriptions to configure Link Thresholds.

Table 4-6: *T1/CSU Link Threshold Profile Configuration Field Descriptions*

Field	Option
Identification: *(display field)*	Displays a number (*1-8*) which identifies the current profile being configured.
Name: *(text field)*	Specifies the selected profile name, up to 19 characters.
LINK DOWN CRITERIA	
Hard Faults CES: *(text field)*	Designates the number of Consecutive Errored Seconds that must occur before a Hard Fault is declared. Input a time from *1-255* seconds. The default is *1* second.
Soft Faults SES: *(text field)*	Defines the number of soft faults - Cyclic Redundancy Check (CRC) or Bipolar Violations (BPV) that must occur before a Severely Errored Second (SES) is declared. This definition of an SES is applies when tallying Consecutive Severely Errored Seconds (CSES) for possible link switchover. Values are from *1* to *1000*. The default is *101*.
Soft Faults CSES: *(text field)*	Defines the number of CSES that must occur before the link is declared down. Input a time from *1-20* seconds. The default is *10* seconds.
Link Down on AIS: *(option field)*	Used to *Enable* or *Disable* a link down condition when an Alarm Indication Signal (AIS) is detected for more than 140 msec.
Link Down on Yellow: *(option field)*	Used to *Enable* or *Disable* a link down condition when a Yellow Alarm is detected for more than 140 msec.
LINK UP CRITERIA	
HF Consecutive Error Free Seconds: *(text field)*	Designates the number of Hard Fault (HF) Consecutive Error-Free Seconds (CEFS) that must occur before the link is declared up (operational). Input a time from *1-255* seconds. The default is *1* second.
SF Consecutive Error Free Seconds: *(text field)*	Designates the number of Soft Fault (SF) CEFS that must occur before the link is declared up (operational). Input a time from *1-255* seconds. The default is *1* second.
LINK ALERT CRITERIA ***Note:*** *The following fields are described in more detail in the following section, "Special Instructions for Link Alert Monitoring in Enhanced T1/CSU Mode" on page 4-16.*	
# 1-3	Identifies each of the three sets of link alert parameters.
ES Count: *(text field)*	Designates the number of ES that must occur in the time specified in the *Interval* field before the action that is set up in the *Action* field will be initiated. Input a count from *0-255* seconds.
Interval(HH:MM): *(text /option field)*	Designates the time frame in which the number of ES must occur before the action that is set up in the *Action* field will be initiated. This is actually a two-part field, where you can enter a number of hours from *0-24*, then select the number of minutes in 15-minute increments.
Severity: *(option field)*	Used to designate whether an *Alert* (Info) or *Minor Alarm* trap is sent when the configured number of ES occur within the time frame specified in the *Interval* field.

Special Instructions for Link Alert Monitoring in Enhanced T1/CSU Mode

The Link Alert Feature enables users to monitor the health of links and automatically receive notification from the DNX-1u in the event errors are detected within a given time interval. The DNX-1u supports three unique Link Alert Profiles, allowing the user to customize this error reporting mechanism.

Note: *The Link Alert feature applies to both the Link APS and Enhanced T1/CSU Modes of operation. The Link APS instructions are provided in* *"Special Instructions for Link Alert Monitoring in Link APS Mode" on page 4-8*.

Link Alert Profiles

The Link Alert Profiles contain *three* configurable parameters:

- Number of Errored Seconds (ES COUNT)
- Specific time period (INTERVAL) in which they are detected
- Notification type (SEVERITY) that specifies whether an Alarm or an Alert is generated.

Table 4-7: *Configuration Options for Link Alert Profiles*

#	ES Count	Interval (HH:MM)	Severity
1	0 to 255	00 to 24 : 00,15,30,45	Alarm/Info
2	0 to 255	00 to 24 : 00,15,30,45	Alarm/Info
3	0 to 255	00 to 24 : 00,15,30,45	Alarm/Info

The *three* Link Alert Profiles define the threshold parameters that can be associated with a link. In order to monitor and generate an alert or an alarm, at least one of the three Link Alert Profiles must be configured. Within each of the three Link Alert Profiles, the following parameters are configurable:

- **ES Count**—This parameter is the threshold number of errored seconds within the user-configured time INTERVAL. If ES COUNT errors are observed within the time INTERVAL, an Alarm/Alert trap is generated. The ES COUNT parameter is configurable in the range of 0 to 255 Errored Seconds.
- **INTERVAL**—This parameter is a sliding window in 15-minute increments. The INTERVAL parameter is configurable in Hours and Minutes in the range of 00 to 24 hours and 15-minute increments 00, 15, 30, and 45.
- **SEVERITY**—This parameter is configurable to generate either an Alarm (Severity=Minor Trap) or an Alert (Severity=Informational Trap) when the threshold is met.

The DNX-1u maintains an Error Comparator that holds the number of errors detected during the INTERVAL time period. The Comparator includes the current 15-minute error count plus the number of errors detected during N-1 preceding 15-minute increments, where N is the number of 15-minute increments required to capture the entire INTERVAL time period. As a new INTERVAL is entered, the “oldest” 15-minute error count is included in the Error Comparator. As errors are detected during the current 15-minute increment, they are added to the Error Comparator in real time.

If ES COUNT errors are observed within the INTERVAL, an Alarm/Alert Set Trap is generated immediately. The Set Trap condition is latched for the remainder of the INTERVAL. At the end of the INTERVAL, a Clear Trap is generated if there is currently a Set Trap latched. As a new INTERVAL is entered, the adjusted Error Comparator is compared to the ES COUNT. If the number of errors still exceeds ES COUNT, a Set Trap is immediately sent. Otherwise, error counting continues in the new time interval.

System Date and Time

System Date and Time is used for logging system events and alarms, and can also display in the SNMP statistics. In order to log event and alarm times accurately, the date and time must be properly set on the DNX-1u. This is accomplished using the Date and Time Menu.

Navigation:
DNX-1u Main Menu ↓ Configuration ↓ Date and Time

Setting System Data and Time

To set the system Date and Time, follow the procedure below.

Note: *The DNX-1u does NOT automatically adjust for Daylight Savings Time.*

1. From the DNX-1u Main Menu, click on **Configuration** and then on **Date and Time**.

   The Date and Time Menu is displayed.

Figure 4-8: *Date and Time Menu*

```
System ID: DNX-1u No. 1                                          Help = [?]
Sycamore Networks, Inc.           DNX-1u

                                Date and Time Menu


                              Month.....: December
                              Day.......: 15
                              Year......: 2006
                              Hour......: 7
                              Minute....: 16
                              Second....: 36
                              Weekday.......: Friday
```

2. Populate this screen with specific date and time information. For information on these fields, refer to the following section *Field Descriptions*.

3. When complete press **X**.

   A message is displayed asking if you want to continue with this change.

4. Press **Y** to save these changes.

Field Descriptions

Table 4-8 lists the field descriptions to set the system Date and Time.

Table 4-8: *Date and Time Field Descriptions*

Field	Description
Month: *(option field)*	Specifies the month, *January* to *December*.
Day: *(option field)*	Specifies the day of the month. Values are *1* to *31*.
Year: *(text field)*	Specifies the year.
Hour: *(text field)*	Specifies the hour. Values are *0* to *23*.
Minute: *(text field)*	Specifies the minute. Values are *0* to *59*.
Second: *(text field)*	Specifies the second. Values are *0* to *59*.
Weekday: *(display field)*	Displays the weekday, which is calculated by the system. This field is not editable.

System Clock Source

Clocking is an extremely important element of a digital transmission system or network, and it is used to provide timing information to the equipment elements within that network. Interconnection of the clocks within a network assures they are synchronized and operating at the same average frequency. A three-tier fallback clock scheme is implemented in the DNX-1u. The DNX-1u supports a Stratum 4 internal clock. No discrete BITS clock port is provided.

The System Clock Source Menu is used to configure the DNX-1u so that it uses a common clock source for all connections. This synchronizes the Time Division Multiplexer (TDM) functions of the backplane. Three clock sources (Primary, Secondary and Tertiary) can be configured.

Navigation:
DNX-1u Main Menu ↓ Configuration ↓ System Clock Source

Clocking Sources

Clocking for the DNX-1u can be derived from Network Line Timing or Internal Timing. Network Line Timing is a reference clock source that is provided using the T1/E1 or High Speed Serial Data (HSSD) ports. Any one of the eight T1/E1 links or two High Speed Ports may be used as reference clock sources. The design assumes one or more of the attached links provides high quality timing. The Internal Timing source is a Stratum 4 clock that can be used as a reference to generate system clocking signals.

The DNX-1u allows the selection of up to three reference clock sources. In the event that a reference clock fails and DNX-1u clocking is configured for *Auto* Mode, an alternate input will be automatically selected based on the source clock configuration settings.

Network Line Timing

Line timing is used to synchronize timing from an incoming signal that is present on a selected T1/E1 port or HSSD port. A subsystem name and port number uniquely identify a specific line timing source.

Internal Timing

The DNX-1u system includes an internal Stratum 4 clock, which is physically located on the main board. When the internal Stratum 4 clock is used as a reference to generate system clocking signals, this state is referred to as *Free Run* Mode. The Stratum 4 clock will be used if you select *Free Run* as a clock source mode or when link reference sources are not available.

Clocking Scheme

The DNX-1u provides *four* clock states:

- **Normal**—The DNX-1u is locked to an external timing source, such as a network timed T1 span. This is a static state where a clock source is active and the system is stable.
- **Free Run**—The DNX-1u uses the internal Stratum 4 clock to generate outbound timing. This is a static state where a clock source is active and the system is stable.
- **Transition**—The clocking state when changing from an external clock and Transition_F.
- **Transition_F**—The clocking state when changing from Free Run back to an external clock.

CAUTION

Changing from one clock source to another is a disruptive process. The internal timing circuitry takes time adjust from a step change when a clock source switchover incurs. Clock reference switching should only occur in an active system in response to a clock failure so a disruption is to be expected.

Immediately following a failure of a selected clock reference, there is a period of time where the timing circuitry is adjusting to the step change. Data errors and buffer slips can occur during this state. The Transition and Transition_F state clocking states keep track of this interval.

When the Transition or Transition_F state is displayed on the console, the DNX-1u has selected the new clock source and is actively using it to provide timing for all outbound traffic. Because of the settling time of the circuitry, data errors and buffer slips are possible and are ignored during these states. In addition, relevant alarms are disabled during this time period.

Non-Revertive Clocking

The DNX-1u uses a non-revertive clocking scheme to select the highest available clock source with the priority defined, either high or low, for each of the timing references:

- Primary
- Secondary
- Tertiary
- Free Run

If the selected clock fails, the timing reference moves to next lower priority reference available. If all sources fail or are not available, the clocking will go to the Free Run mode.

The non-revertive clocking algorithm proceeds through the high to low priority progression until it reaches the Free Run state. It then evaluates the other options at the Free Run state until one or more references become available, then the algorithm will revert to the highest priority clock reference. For more information, refer to *Clocking Scenarios*.

Clock Prioritization

To prioritize the clocking source to be used for normal operation and clock fault conditions, a user-definable three-level hierarchical scheme is provided using the management interfaces and SNMP access in addition to the baseline/default *Free Run* clock (Internal Stratum 4 oscillator).

Table 4-9 provides a summary of the valid timing sources for each assignment.

Table 4-9: *Clock Assignments*

Reference	Valid Timing Sources
Primary	• T1/E1 Port • HSSD Port • Not Configured
Secondary	• T1/E1 Port • HSSD Port • Not Configured
Tertiary	• T1/E1 Port • HSSD Port • Not Configured

The number of active system clock references (up to three) that can be assigned and the method by which fault and recovery modes are handled are all at user discretion.

Clocking Scenarios

Figure 4-9 provides a high-level perspective on the operation of the various reference clock modes available. It depicts the paths taken based on the pre-defined scheme where backup is automatic upon failure (black arrows) and restoration is automatic upon recovery of a more desirable clock than Free Run (gray arrows). Automatic (A) Mode assesses all potential sources, in higher-to-lower level sequence, prior to abandoning a faulty clock reference (using Holdover to facilitate transition).

When Primary (1) Mode is selected, only the designated primary and *Free Run* clocks are available. Secondary (2) and Tertiary (3) Modes operate similarly. For every transition between clocking sources, no matter what the mode or direction, an event will be logged and an SNMP trap issued.

Figure 4-9: *Failure and Recovery Process*

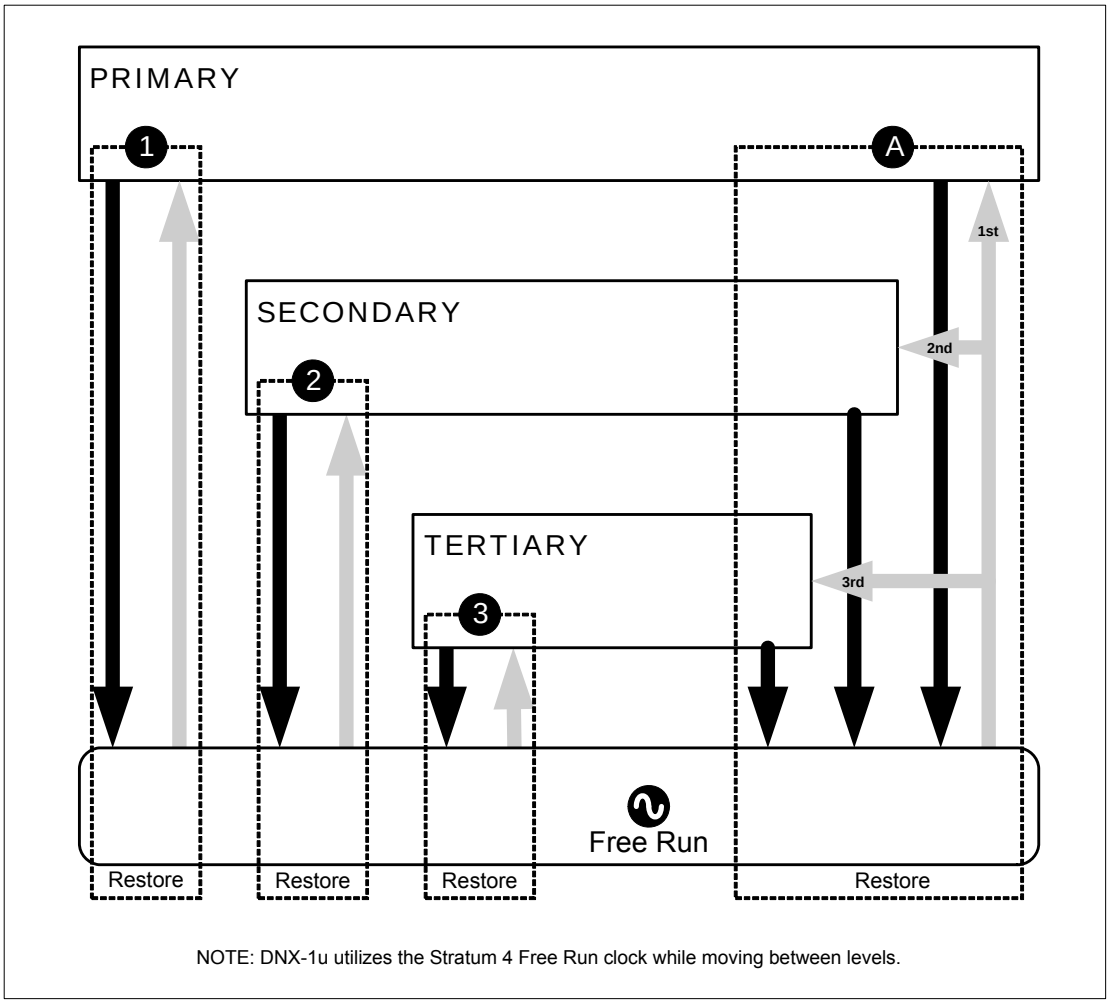

System Timing Selection and Behavior

The following sequence of events occur during system timing and selection:

Note: *These events occur regardless of the number of user-defined system clock references.*

1. System is configured for Automatic Mode.
2. System starts in Free Run Mode.
3. System checks the Primary clock source for the following:
   - Is it configured?
   - If YES, is the port valid (in terms of port alarms, not port accuracy or running diagnostic tests, such as BERT and LOOP)?
     - If YES, switch system timing to Primary.
     - Go into Clock Monitor State.
4. If Primary is unavailable, the system checks the Secondary clock source for the following:
   - Is it configured?
   - If YES, is the port valid (in terms of port alarms, not port accuracy or running diagnostic tests, such as BERT and LOOP)?
     - If YES, switch system timing to Secondary.
     - Go into Clock Monitor State.
5. If both Primary and Secondary are unavailable, the system checks the Tertiary clock source for the following:
   - Is it configured?
   - If YES, is the port valid (in terms of port alarms, not port accuracy or running diagnostic tests, such as BERT and LOOP)?
     - If YES, switch system timing to Tertiary.
     - Go into Clock Monitor State.
6. If any of the above sources are not configured or not valid, the following occurs:
   - System switches to Free Run Mode.
   - Go into Clock Monitor State.

When the system is in Clock Monitor State and the current clock source fails (in terms of port alarms, not port accuracy), the system checks the next lower source for the following:

1. Is it configured?
   - If YES, is the port valid (in terms of port alarms, not port accuracy or running diagnostic tests, such as BERT and LOOP)? and running for at least 20 seconds without errors?
     - If YES, switch system timing to the next lower clock source.
     - Return to Clock Monitor State.
2. The system checks each successive lower clock source until it finds one to use, or it reverts back to Free Run Mode.
3. The system does not return to a higher clock source unless a failure occurs.

DNX-1u System Clock Source Selection Criteria

The system will search for the next available reference clock source if any of the following DEVICE-level conditions are TRUE:

- Device Offline
- Device in Standby
- Device Defective
- Quad T1E1 Module Missing (if a clock configured to any port(s) on this module)
- Device Out of Service

Once the system determines the DEVICE is Present and Online, it will search for the next available reference clock source if any of the following LINK-level conditions are TRUE:

- Far End sending AIS
- Near End LOF
- Near End LOF/RED
- Near End LOS
- Severely Errored Frame (SEF)
- Yellow Alarm
  - applies regardless of whether Yellow Alarm is an APS switchover criteria
- Soft Fault Criteria exceeded and is an APS switchover criteria
- Port In Test Mode (internal BERTs)
- Link in Loop Back Mode
- Link Out of Service
- Link is configured as 1-1 Unframed
- TX Slip
- RX Slip

Link Down/Offline

Note: *The system will not switch the reference clock source if any of the following LINK-level conditions are TRUE:*

- APS Mode - Traffic is manually switched to the Protection Link
- APS Mode - Soft Fault Criteria exceeded but is not an APS switchover criteria
- Link In Test Mode

Clock Switch Selection Criteria

The DNX-1u clock switch selection criteria for the DNX-1u is as follows:

The Near End LOF will:

- Look for an Out of Frame (OOF) condition and declare a LOF once the OOF is detected.
- For E1:
  - If three consecutive Frame Alignment Signals (FASs) are in error or
  - If a Non-Facility Associated Signal (NFAS) is in error.
- For T1:
  - Determines the Frame Alignment within 4.4ms with 2 of 4 framing bits in error for D4.
  - Determines the Frame Alignment within 15ms with 2 of 4 framing bits in error for ESF.

The Far End sending Alarm Indication Signal (AIS) is declared if the OOF all-ones condition is present for at least 100 ms for with no Automatic Protection Switching (APS). There is a fast version of AIS which is declared in 60ms and is used towards reporting a hard fault for APS.

Severe Errored Frame (SEF) is declared if two or more framing bit errors are detected out of four frames.

An Errored Second (ES) counter is updated every second and is displayed in the Diagnostic Manager summary screen when the following errors are detected:

- Loss of Frame (LOF)
- Alarm Indication Signal (AIS)
- YELLOW Alarm
- Loss of Signal (LOS)
- Receive or Transmit SLIPs
- Severely Errored Frame (SEF)

For a Framing Bit Error Condition:

- The message “Frm Bit Errors.....: “is displayed and incremented by one for every second if framing errors existed in a previous second.
- When an OOF condition exists, Framing Bit Errors are suppressed.
- For E1:
  - If FAS bits are in error or
  - If a NFAS is in error.
- For T1:
  - Fe-bit error in ESF
  - F-bit error in D4

Critical Fault Trap

A Critical Fault Trap (CFT) is generated when any of the following conditions are TRUE:

- For 10 consecutive seconds if any of the following condition exists:
  - Cyclic Redundancy Check (CRC) errors exist and in each second the CRC error is more than 101 and less than 334 for T1 (1000 for E1).
  - OOF exists and in each second, OOF is equal to 2.
- Every occurrence of LOS, Near End LOS, AIS, SEF or port is in test, after any of these conditions have been previously cleared.

Traps, Events and CFT

LOF, LOS, SEF, ES and AIS events always generate events, and traps and can generate a CFT (if a condition exists for 10 consecutive seconds).

CRC errors (between 101 to 334 for T1 and 101 to 1000 for E1) do not generate events or traps; however, they can generate a CFT when the error condition exists at least for 10 consecutive seconds. The CRC Error Seconds counter is displayed on Link Status screen.

Configuring the Source Clock

The System Clock Source Menu is used to configure the DNX-1u so that it uses a common clock source for all connections. This synchronizes the Time Division Multiplexer (TDM) functions of the backplane. Three clock sources (Primary, Secondary and Tertiary) can be configured.

To configure the Source Clock, follow the procedure below.

1. From the DNX-1u Main Menu, click on **Configuration** and then on **System Clock Source**.

   The System Clock Source Menu is displayed.

Figure 4-10: *System Clock Source Menu*

```
System ID: DNX-1u No.1                                          Help = [?]
Sycamore Networks, Inc.            DNX-1u

                            System Clock Source Menu



Mode......: Free run



Primary...: T1E1 A                     Port: 01
Secondary.: T1E1 B                     Port: 02
Tertiary..: SYNC                       Port: 02



ACTIVE....: NA                         Port: NA        Free run

Clock state: FREE-RUN
```

2. Populate this screen with specific system clock information. For information on these fields, refer to the following section *Field Descriptions*.
3. When complete press **X**.

   A message is displayed asking if you want to update the configuration.
4. Press **Y**.

   The system clocking information is modified.

Field Descriptions

Table 4-10 lists the field descriptions to configure the System Clock Source.

Table 4-10: *System Clock Source Field Descriptions*

Field	Description
Mode: *(option field)*	Selects whether the DNX-1u uses line timing or its own internal clock (Free Run). It also determines the priorities among the selected reference clock sources. The options are: • *Auto:* Automatically selects the highest priority clock source that is currently available. It will automatically select from the *primary, secondary,* and *tertiary* sources in order. Once the DNX-1u software finds an available external source, it will use it until it is no longer valid. ***Note:*** *In Auto Mode, when switching from one selected clock source to another selected clock source, the switching is non-reverting. This indicates the line source will NOT automatically switch back to the previous line timing source--should it again become available--unless the current source is no longer valid. When the current source is still valid and you want to revert back to the original source, you must do so manually, then return to Auto Mode.* Once a source is no longer valid, the DNX-1u software will immediately switch to *Free Run* Mode in order to temporarily maintain system timing. The DNX-1u software will re-check the primary, secondary, and tertiary sources, in order, to be sure they are configured and valid. If one of these sources is both configured and valid, it will be selected. If none of these sources are configured and valid, *Free Run* will continue to be the clocking mode. • *Primary:* Selects the primary source if configured and valid. If it is not, the internal Stratum 4 clock will be used in *Free Run* Mode. Whenever the selected clock source becomes configured and valid, it will be used. • *Secondary:* Selects the secondary source if configured and valid. If it is not, the internal Stratum 4 clock will be used in *Free Run* Mode. Whenever the selected clock source becomes configured and valid, it will be used. • *Tertiary:* Selects the tertiary source if configured and valid. If it is not, the internal Stratum 4 clock will be used in *Free Run* Mode. Whenever the selected clock source becomes configured and valid, it will be used. • *Free Run:* Selects the internal Stratum 4 clock as the source clock. ***Note:*** *Auto Mode is recommended because it provides clock source redundancy.*
Primary: *(option field)*	Specifies a subsystem and port number to utilize line timing as the primary clock source, or set to *Not Configured.* The options are: • *T1E1-A* • *T1E1-B* • *SYNC* • *Not Configured*
Secondary: *(option field)*	Specifies a subsystem and port number to utilize line timing as the secondary clock source, or set to *Not Configured.* The options are: • *T1E1-A* • *T1E1-B* • *SYNC* • *Not Configured*

Table 4-10: *System Clock Source Field Descriptions (Continued)*

Field	Description
Tertiary: *(option field)*	Specifies a subsystem and port number to utilize line timing as the primary clock source, or set to *Not Configured.* The options are: • *T1E1-A* • *T1E1-B* • *SYNC* • *Not Configured*
Active: *(display field)*	Indicates the clock source being used by the DNX-1u. The display indicates the subsystem through which the line timing is currently being received.
Port: *(display field)*	Indicates the port number of the subsystem card through which the line timing is actively being received, or *NA* if not applicable to the active source. To the right of the *Port* field, amplifying information is provided for the active source clock, either *Primary*, *Secondary*, *Tertiary* or *Free Run*.
Clock State: *(display field)*	Indicates the current operating state of the clock.

SNMP Agent Configuration

In addition to the embedded menu system, a Simple Network Management Protocol (SNMP) Agent allows the DNX-1u to be configured and managed using an Element Management System (EMS) or Network Management System (NMS) program running on one or more computers anywhere in the network. The Sycamore Networks ENvision and ENvision Plus products are examples of these Management Systems.

Note: *Release 3.5 FP1/3.5 FP2 does not support ENvision Plus Network Management System (NMS).*

The SNMP Agent Configuration Menu is used to configure SNMP parameters for the DNX-1u. For information on specific SNMP Agent capabilities, refer to the current version of the DNX Enterprise MIB, which can be found on the Sycamore Networks website. Go to the Sycamore Networks's website at http://www.sycamorenet.com to download the DNX Enterprise MIB. Refer to the *DNX Enterprise MIB Guide* (DOC-001-11002) for details on the MIB.

Navigation:
DNX-1u Main Menu ↓ Configuration ↓ SNMP Agent Configuration

Configuring the SNMP Agent

To configure the SNMP Agent, follow the procedure below.

Note: *The SNMP Agent Configuration Menu is accessible only when you are logged in with Admin-level privileges.*

1. From the DNX-1u Main Menu, click on **Configuration** and then on **SNMP Agent Configuration**.

   The SNMP Agent Configuration Menu is displayed.

Figure 4-11: *SNMP Agent Configuration Menu*

```
System ID: DNX-1u No. 1                                          Help = [?]
Sycamore Networks, Inc.           DNX-1u
                         SNMP Agent Configuration Menu

System Group Parameters
-----------------------
System domain name....: enter domain name here
System description....: Sycamore Networks, Inc.     DNX-1u
System location.......: enter location here
System contact........: enter contact name here

General Agent Properties
------------------------
Sets..................: Enabled
Traps................: Enabled
Authentication traps..: Enabled
Provisioning traps....: Enabled
Alarm Trap format.....: Single Enterprise Trap for all Alarms




[C]lient Profiles Menu
```

2. Populate this screen with specific SNMP Agent information. For information on these fields, refer to the following section *Field Descriptions*.
3. When complete press **X**.

   A message is displayed asking if you want to update the configuration.
4. Press **Y**.

   The SNMP Agent information is modified.

Field Descriptions

Table 4-11 list the field descriptions to configure an SNMP Agent.

Table 4-11: *SNMP Agent Configuration Field Descriptions*

Field	Description
SYSTEM GROUP PARAMETERS	
System domain name: *(text field)*	Identifies the DNX-1u system, up to 50 ASCII characters. It is used to set the MIB-II sysName variable. The default name is "*enter domain name here*".
System description: *(not user-programmable)*	Provides a description of the DNX-1u system. This field includes the full name and version identification of the system's hardware type, software operating system, and networking software. It sets the MIB-II sysDescr variable.
System location: *(text field)*	Specifies the physical location of the DNX-1u system, up to 100 ASCII characters, and used to set the MIB-II sysLocation variable. The default location is "*enter location here*".
System contact: *(text field)*	Identifies the contact person for the DNX-1u system and contact information, up to 50 alphanumeric characters. It is used to set the MIB-II sysContact variable. The default contact is "*enter contact name here*".
GENERAL AGENT PROFILES	
Sets: *(option field)*	Enables/disables set messages. The default is *Enabled*.
Traps: *(option field)*	Enables/disables trap messages. The default is *Enabled*.
Authentication traps: *(option field)*	When this parameter is *Enabled*, the DNX-1u sends authentication traps when an SNMP request is received with an invalid community string. If the strings do not match, access is denied. If the strings match, read-only or read/write access is provided, depending on the community string matched. The traps are prevented when the parameter is *Disabled*. The default is *Enabled*.
Provisioning traps: *(option field)*	Provisioning traps are traps triggered by a user configuration change and do not include alarms or event traps. When this parameter is *Enabled*, provisioning traps are sent to all of the IP addresses configured in the *Trap Destinations* fields (Client Profile Menu). When it is *Disabled*, provisioning traps are sent to all of those IP addresses except the IP address from which the system was provisioned using SNMP. The default is *Enabled*.
Alarm Trap Format: *(option field)*	Used to select the Alarm Trap format and provide a choice of either *Single Enterprise Trap for all Alarms* or *Separate Enterprise Traps for each Alarm*. The Single Enterprise Trap has a single trap ID that contains eight fields used to define the type of alarm. Information describing the alarm is available within the trap in the form of the following fields: trap sequence number, resource number, trap time (date/time), resource address string, resource type, trap type, (identifies different alarm codes), resource state (bit flag), and trap severity. This key information helps determine the type and severity of the alarm posted in the system. The trap sequence number is used to identify the last generated trap message. It is also included in each trap Protocol Data Unit (PDU) to help the NMS to realize if a trap is missed. When selecting the Separate Enterprise Traps option, the number of traps provided increases since there is a separate trap generated for each alarm or event. The default is *Single Enterprise Trap for all Alarms.*

Configuring SNMP Client Profiles

To configure the SNMP Client Profiles, follow the procedure below.

Note: *The SNMP Agent Configuration Menu is accessible only when a user is logged in with Admin-level privileges.*

1. From the DNX-1u Main Menu, click on **Configuration** and then on **SNMP Agent Configuration**.

   The SNMP Agent Configuration Menu is displayed.

2. Press **C**.

   The Client Profiles Menu is displayed.

Figure 4-12: *Client Profiles Menu*

```
System ID: DNX-1u No. 1
Sycamore Networks, Inc.           DNX-1u
                            Client Profiles Menu

   Trap IP                                                PDU    Max    Timeout
   Destination     Trap Community Profile                 Type   Retry  in Secs
   --------------- ----------------------------------     ------ -----  -------
1. 0.0.0.0         trapProfile                             v1Trap  N/A     N/A
2. 0.0.0.0         trapProfile                             v1Trap  N/A     N/A
3. 0.0.0.0         trapProfile                             v1Trap  N/A     N/A
4. 0.0.0.0         trapProfile                             v1Trap  N/A     N/A
5. 0.0.0.0         trapProfile                             v1Trap  N/A     N/A
6. 0.0.0.0         trapProfile                             v1Trap  N/A     N/A
7. 0.0.0.0         trapProfile                             v1Trap  N/A     N/A
8. 0.0.0.0         trapProfile                             v1Trap  N/A     N/A

   Read-Only Community Profiles            Read/Write Community Profiles
   ----------------------------            -----------------------------
1. public                                   1. private
2. public                                   2. private
3. public                                   3. private
4. public                                   4. private
```

3. Populate this screen with specific SNMP Client information. For information on these fields, refer to the following section *Field Descriptions*.

4. When complete press **X**.

   A message is displayed asking if you want to update the configuration.

5. Press **Y**.

   The SNMP Client information is modified.

Field Descriptions

Table 4-12 list the field descriptions to configure an SNMP Client Profiles.

Table 4-12: *SNMP Client Profiles Field Descriptions*

Field	Description
Trap IP Destination: *(text field)*	Specifies the Client-Manager IP Addresses in “dotted decimal notation” form. Each of the four numbers in the address can range from *0* to *255*. The addresses should match the addresses of the SNMP network management station that receive the SNMP trap messages generated by the DNX-1u. Up to eight addresses can be entered. The default address is *0.0.0.0*.
Trap Community Profiles: *(text field)*	Indicates the community string used in each trap message sent to the associated trap destination, up to 35 ASCII characters. The default is *trapProfile*.
PDU Type: *(option field)*	Designates the type of PDU used by SNMP as one of the following: • *v1trap* - A trap with an SNMPv1 format is generated. • *v2trap* - A trap with an SNMPv2 format is generated. • *Inform* - An SNMP Inform Request is generated.
Max Retry: *(option field)*	With an *Inform* PDU type, this is used to set the number of times that a message will be sent until it is acknowledged. The range is from *1* to *10*. The default is *1*. ***Note:*** *This setting is not applicable for v1trap and v2trap PDU types.*
Timeout in Sec.: *(option field)*	With an *Inform* PDU type, this is used to set the number of seconds before a retry occurs. The available settings are *5*, *10*, *15*, and *20* seconds. The default is *5*. ***Note:*** *This setting is not applicable for v1trap and v2trap PDU types.*
Read-Only Community Profiles: *(text field)*	Indicates the community string used as a password for read-only access to the DNX-1u’s MIB objects, up to 35 alphanumeric characters. The default is *public*.
Read/Write Community Profiles: *(text field)*	Indicates the community string used as a password for read-write access to the DNX-1u’s MIB objects, up to 35 alphanumeric characters. If this parameter is set to the same value as the Read-Only Community profile, write access will be denied. The default is blank (no default string).

User Profiles Configuration

The Users Profile Manager Menu can be used by the Administrator to add, change, or delete user information. It also allows access to the User Configuration Menu from which the Administrator configures users and sets their security levels.

Navigation:
DNX-1u Main Menu ↓ Configuration ↓ Users Profile

Adding User Profiles

To add a User Profile, follow the procedure below.

Note: *The Administrator can add up to 20 different users; duplicate names are not accepted.*

The User Security System Chart (Table 4-14) provides an overview of the differences between the four different user access security levels.

Caution

When configuring users for the first time, you should always make sure that an Admin-level user is configured in the first session. Otherwise, it will become impossible to configure more Admin-level users in the future.

1. From the DNX-1u Main Menu, click on **Configuration** and then on **Users Profile**.

   The Users Profile Manager Menu is displayed.

2. Press **A**.

   The User Configuration Menu is displayed.

Figure 4-13: *User Configuration Menu*

```
System ID:                                                    Help = [?]
Sycamore Networks, Inc.          DNX-1u

                            User Configuration Menu



              Name.......................:
              Audit trail identifier.....:
              Contact....................:
              Password (at least 6 char).:
              Confirm password...........:
              Security level.............:
              Shell Type.................:
```

3. Populate this screen with specific user information. For information on these fields, refer to the following section *Field Descriptions*.

Note: *All user entry fields require mandatory entries except for the "Contact" field.*

4. When complete press **X**.

   A message is displayed asking if you want to update the configuration.

5. Press **Y**.

   The user information is saved.

Note: *You must exit the Users Profile Manager Menu in order for the changes to take effect.*

Field Descriptions

Table 4-13 list the field descriptions for to add a User Profile.

Table 4-13: *User Configuration Field Descriptions*

Field	Description
Name: *(text field)*	Specifies the user name, up to 11 alphanumeric characters. This name is displayed on the *Users Profile Manager Menu*. User names are case-sensitive.
Audit Trail Identifier: *(text field)*	Used to enter an ID, up to 3 alphanumeric characters that is displayed in the ID header field on the *Users Profile Manager Menu*. Adding, deleting, or changing a user configuration is considered to be an audit trail event. An audit trail event message starts with the audit trail identifier and then >> to indicate it is an audit trail message. Other user information that include login or logout is considered a regular event message. Since multiple logins of the same user are allowed, the login and logout event message includes the user name as well as total login number of that user. For further information on events, refer to Section 8, "Events".
Contact: *(text field)*	Specifies user contact information, up to 31 alphanumeric characters. For example, phone number or e-mail address.
Password: *(text field)*	A password of at least six (but not more than 11) alphanumeric characters. Less than six characters will cause an error to occur upon exit. Passwords are case-sensitive and will not display on any menu.
Confirm Password: *(text field)*	This field is used to confirm the password entered in the *Password* field.
Security Level: *(option field)*	Used to select one of the four access security levels for the user. The security level will also display in the Rights header field on the Users Profile Manager Menu. Refer to the User Security System Chart (Table 4-14 on page 4-39) for an overview of each level of access. The options are as follows: • *Admin* - The highest level of access. Users at this level can access all DNX-1u functions and can add/remove users from the system. This user is not able to view another user's password, but he can delete and add new passwords in the event a user has forgotten his password. • *Provision* - Users at this level can make configuration changes, run diagnostic tests, and do everything that an Administrator can do except add/delete users, change passwords, or download software. • *Test* - Users at this level have all of the privileges of a View Only user, plus the ability to initiate and terminate BERT tests and loopbacks as well as clear performance registers. • *View Only* - Users at this level can view settings, options, and alarm information but cannot change anything.
Shell Type: *(option field)*	Specifies whether the user will use the menu system or Command Line Interface (CLI) to communicate with the DNX-1u Router Subsystem. ***Note:*** *CLI should only be used by someone familiar with the commands. If a user logs into the system and the command line is displayed, type the word* **menu** *and press* **Enter** *to access the menu system.*

Modifying User Profiles

The Administrator can change any information associated with a user profile, including the profile name and password.

To modify a User Profile, follow the procedure below.

1. From the Users Profile Manager Menu, move your cursor to the user login you want to modify and press **Enter**.

   The User Configuration Menu is displayed.

2. Modify the selected user.

3. When complete press **X**.

   A message is displayed asking if you want to update the configuration.

4. Press **Y**.

   The user information is saved.

Note: *You must exit the Users Profile Manager Menu in order for the changes to take effect.*

Deleting User Profiles

To delete a User Profile, follow the procedure below.

1. From the Users Profile Manager Menu, move your cursor to the user profile you want to delete.

2. Press **D**.

   A message is displayed asking if you want to delete the selected user.

3. Press **Y** to confirm.

   You are returned to the User Profile Manager Menu.

User Security System

Table 4-14 provides an overview of the *four* different user access security levels.

Table 4-14: *User Security System Chart*

Menu Name	Admin	Provision	Test	View Only
STATUS AND DIAGNOSTICS				
System Summary	Read / Write	Read / Write	Read / Write	Read-Only
CONNECTION MAPS MANAGER				
Active Map	Read / Write	Read / Write	Read / Write [1]	Read / Write [2]
Map Configuration	Read / Write	Read / Write	Read / Write [3]	Read / Write [4]
Map Definition	Read / Write	Read / Write	Read-Only	Read-Only
Trunk Conditioning Profile	Read / Write	Read / Write	Read-Only	Read-Only
CONFIGURATION				
Unit Profile	Read / Write	Read / Write	Read-Only	Read-Only
Subsystem Profile	Read / Write	Read / Write	Read-Only	Read-Only
Protection Groups (HAC Only)	Read / Write	Read / Write	Read-Only	Read-Only
Link APS Threshold Profiles (APS Only)	Read / Write	Read / Write	Read-Only	Read-Only
Link Threshold Profiles (EC Only)	Read / Write	Read / Write	Read-Only	Read-Only
Date and Time	Read / Write	Read / Write	Read-Only	Read-Only
System Clock Source	Read / Write	Read / Write	Read-Only	Read-Only
SNMP Agent Configuration	Read / Write	Read / Write	Read-Only	Read-Only
Users Profile	Read / Write	No Access	No Access	No Access
ENvision Plus Configuration	Read / Write	No Access	No Access	No Access
TACACS+ Configuration	Read / Write	No Access	No Access	No Access
EVENTS				
Monitor Events	Read / Write	Read / Write	Read-Only	Read-Only
Display Event Log	Read / Write	Read / Write	Read / Write	Read / Write
Event Configuration	Read / Write	Read / Write	No Access	No Access
UTILITIES				
Router	Read / Write	Read / Write	Read / Write	Read-Only
Database	Read / Write	Read / Write	No Access	Read-Only
Cold Reset Device	Read / Write	No Access	No Access	Read-Only

Table 4-14: *User Security System Chart (Continued)*

Menu Name	Admin	Provision	Test	View Only
Warm Reset Device	Read / Write	No Access	No Access	Read-Only
Download Software	Read / Write	No Access	No Access	Read-Only
Firmware Management	Read / Write	No Access	No Access	Read-Only
Close All Other Telnet Sessions	Read / Write	Read / Write	No Access	Read-Only
Part ID	Read / Write	No Access	No Access	Read-Only
ABOUT				
System Profile	Read-Only	Read-Only	Read-Only	Read-Only
Who Am I	Read / Write	Read / Write	Read / Write	Read / Write
Feature Keys	Read / Write	Read-Only	Read-Only	Read-Only

Chart Footnotes

1. Tester:

Can use [F]ilter, [H]ome, [E]nd, [N]ext, and [P]rev page keys only.
Cannot use any function keys at the Configuration Maps Menu, but can use [F]ilter, [H]ome, [E]nd, [N]ext, and [P]rev page keys on the Map Configuration Menu.

2. Viewer:

Can use [F]ilter, [H]ome, [E]nd, [N]ext, and [P]rev page keys only.
Can use any function keys at the Display Event Log screen, except the Clear Event Log function key.
Cannot use any function keys at the Configuration Maps Menu, but can use [F]ilter, [H]ome, [E]nd, [N]ext, and [P]rev page keys on the Map Configuration Menu.

ENvision Plus Configuration

The ENvision Plus Configuration Menu is used to configure a DNX-1u node for establishing management using the ENvision Plus Network Management System.

Note: *Release 3.5 FP1/3.5 FP2 does not support ENvision Plus Network Management System (NMS).*

Navigation:
DNX-1u Main Menu ↓ Configuration ↓ ENvision Plus Configuration

Configuring ENvision Plus

To configure ENvision Plus, follow the procedure below.

1. From the DNX-1u Main Menu, click on **Configuration** and then on **ENvision Plus Configuration**.

   The ENvision Plus Configuration Menu is displayed.

Figure 4-14: *ENvision Plus Configuration Menu*

```
System ID: DNX-1u No. 1                                          Help = [?]
Sycamore Networks, Inc.           DNX-1u


                    ENvision Plus Configuration Menu
                    --------------------------------

            EMS Managed Node.......: Yes
            Authentication ID......: DNX1u7
            Event Reporting........: Enable
            Confirm Update ........: Yes
            Confirm Timeout in secs: 3

Cluster 1:                              Cluster 2:
----------                              ----------
Route Mgr IP..:172.100.20.12             Route Mgr IP..: 0.0.0.0
Event Mgr IP..:172.100.20.13             Event Mgr IP..: 0.0.0.0
```

2. Populate this screen with specific configuration information. For information on these fields, refer to the following section *Field Descriptions*.
3. When complete press **X** to save the configuration.

   A message is displayed asking if you want to update the configuration.
4. Press **Y**.

   You are returned to the ENvision Plus Configuration Menu.

Field Descriptions

Table 4-15 list the field descriptions to configure ENvision Plus.

Table 4-15: *ENvision Plus Configuration Field Descriptions*

Field	Description
EMS Managed Node: *(option field)*	Select *Yes* to allow the node to be managed by ENvision Plus client software or *No* for local (terminal, SNMP or Telnet) management.
Authentication ID: *(text field)*	Specifies the Authentication String field of the Node Properties Menu. This field is case-sensitive. The value must be input exactly as it displays on the Node Properties Menu.
Event Reporting: *(option field)*	Specifies Event reporting. select *Enable* to direct the DNX-1u node to send event reports to ENvision Plus or *Disable* to withhold events.
Cluster 1	
Routing Mgr: *(IP address)*	For a dual-server ENvision Plus cluster, enter the virtual IP address of the Routing Manager. For a single-server cluster, enter the public IP address of the server. This allows the DNX-1u network elements connect to the server cluster.
Event Mgr: *(IP address)*	For a dual-server ENvision Plus cluster, enter the virtual IP address of the Event (Database) Manager. For a single-server cluster, enter the public IP address of the server. If Event Reporting is *Enabled*, DNX-1u network elements will send syslog information to this address. The Routing Manager resource group uses this address to retrieve network topology.
Cluster 2 (Not used in this software version)	
Routing Mgr: *(IP address)*	N/A
Event Mgr: *(IP address)*	N/A

TACACS Plus Configuration

The Terminal Access Controller Access Control System (TACACS Plus) is a client-server security protocol that allows network administrators to configure user names and passwords on a centralized, secure server instead of having to administer user names, passwords and user credentials on every managed piece of equipment in the network.

Note: *If the TACACS server or link goes down, when this server or link is restored the system will revert to the default system settings.*

TACACS Plus has *three* steps:

- **Authentication**—Verifies the username and password
- **Authorization**—Enables each user to be permitted a different set of services and privilege levels for each service
- **Accounting**—provides a way to track activities of logged-in users.

The TACACS Plus Menu is used to configure the DNX-1u TACACS Plus client. The client will query a TACACS Plus server when a user tries to log in.

Navigation:
DNX-1u Main Menu ↓ Configuration ↓ TACACS Plus

Configuring TACACS Plus

To configure TACACS Plus, follow the procedure below.

1. From the DNX-1u Main Menu, click on **Configuration** and then on **TACACS Plus**.

   The TACACS Plus Menu is displayed.

Figure 4-15: *TACACS Plus Configuration Menu*

```
System ID: DNX-1u No. 1                                          Help = [?]
Sycamore Networks, Inc.          DNX-1u


                                TACACS Plus Menu

server ip address.: 0.0.0.0
server key........:
server port.......: 49
service...........: exec
debug.............: 0
do accounting.....: No
do authorization..: No
provision code....:
admin code........:
```

2. Populate this screen with specific configuration information. For information on these fields, refer to the following section *Field Descriptions*.
3. When complete press **X** to save the configuration.

   A message is displayed asking if you want to update the configuration.
4. Press **Y**.

   You are returned to the TACACS Plus Menu.

Field Descriptions

Table 4-16 list the field descriptions to configure TACACS Plus.

Table 4-16: *TACACS Plus Field Descriptions*

Field	Description
server ip address: *(IP address)*	Specifies the address of the TACACS Plus server in “dotted decimal notation” form. The default is *0.0.0.0*.
server key: *(text field)*	Specifies an authentication and encryption key (optional). Must match key provisioned on TACACS Plus server.
server port: *(text field)*	Specifies a server port number. Making an entry in this field will override the default, which is port *49*.
service: *(text field)*	Enter “exec” for shell access (this entry is case sensitive and required). All other choices are Cisco router-related.
debug: *(option field)*	Specifies TACACS Plus debugging. Set this field to *1* for TACACS Plus debug events generated in the DNX-1u event log. Choices are: • 0 (*default*) • 1
do accounting: *(option field)*	Specifies accounting. If set to *Yes* a record of DNX-1u user log-ins and log-outs is created on the TACACS Plus server.
do authorization: *(option field)*	Performs authorization. If set to *Yes* the server will assign a privilege level to a user. If *No* is selected, this field will be view only. The TACACS Plus authorization step is the service level configured on the server for the user. It can be used to automatically set the privilege level of the user. The DNX-1u maps the following values to privilege levels: • 1 - *View Only* • 2 - *Test* • 3 - *Provision* • 4 - *Admin*
provision code: *(text field)*	Enter the password to go to provision after gaining default access using TACACS Plus. ***Note:*** *In order to be prompted for the privilege changing password, type* ***Ctrl G****.*
admin code: *(text field)*	Enter the password to go to admin after gaining default access using TACACS Plus. ***Note:*** *In order to be prompted for the privilege changing password, type* ***Ctrl G****.*

Section 5
Subsystem-Level Configuration

Subsystem Profile Menu

The Subsystem Profile Menu provides access to several submenus where you can configure the various DNX-1u Subsystems.

The Subsystem Profile Menu is illustrated in Figure 5-1.

Figure 5-1: *Subsystem Profile Menu Structure*

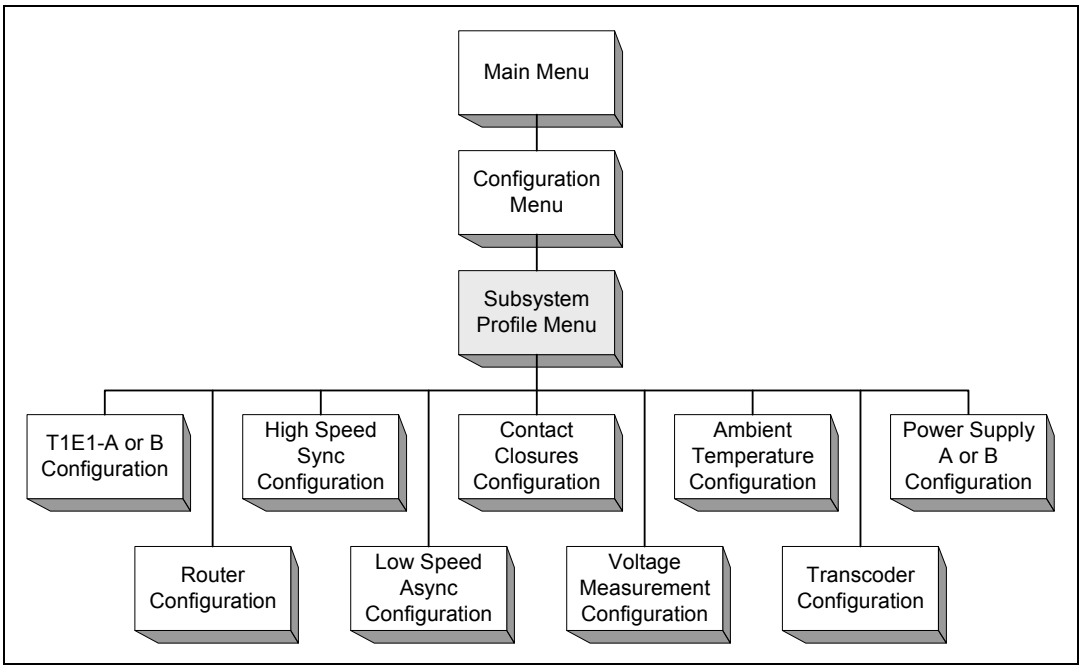

Subsystem Profiles

Subsystem-level configuration can be performed from the Subsystem Profile Menu, which provides access to configuration menus for each of the *nine* DNX-1u Subsystems.

Navigation:
DNX-1u Main Menu ↓ Configuration ↓ Subsystem Profile

Accessing Subsystem Profiles

To access a Subsystem Profile, follow the procedure below.

Note: *Only modular subsystems (Quad T1/E1 or Power Supplies) can be added or removed.*

1. From the DNX-1u Main Menu, click on **Configuration** and then on **Subsystem Profile**.

   The Subsystem Profile screen is displayed.

Figure 5-2: *Subsystem Profile Screen*

```
System ID: DNX-1u No. 1                                          Help = [?]
Sycamore Networks, Inc.           DNX-1u

                    Unit #1  Subsystem Profile

   ID             Type
---------   ----------------
T1E1-A      Quad T1/E1
T1E1-B      Quad T1/E1
ROUTER      Router
SYNC        High Speed Sync
ASYN        Low Speed Async
CONT        Contact Closures
VOLT        Voltage Measure
TEMP        Ambient Temp
TCODER      Transcoder
PS-A        Power
PS-B        Power




   [Enter]Subsystem Cfg      [R]emove subsystem    [A]dd subsystem
```

2. Move your cursor to the selected subsystem and press **Enter**.

   The selected subsystem screen is displayed.

Refer to the following sections to configure, add or delete the following subsystems:

- T1/E1 Subsystem (T1E1-A and T1E1-B)
- Router Subsystem
- High-Speed Synchronous Data Subsystem
- Low-Speed Asynchronous Data Subsystem
- Contact Closures Subsystem
- Voltage Measurement Subsystem
- Ambient Temperature Subsystem
- Transcoder Configuration
- Power Supply Subsystem (A and B)

T1/E1 Subsystem

This section guides you through the process of configuring links for the T1/E1 Subsystem. These links are available regardless of the Feature Option Key enabled; however, the configuration options for these links are dependent on which Feature Option Keys are enabled. The possible links are listed below and described in the sections that follow:

- T1/E1 Link Configuration (Normal)
- Automatic Protection Switching (APS)
- Enhanced T1/Channel Service Unit (CSU)

Note: *Rapid Trunk Conditioning is an option available for link configuration.*

Configuring T1/E1 Link Configuration (Normal)

Note: *The examples below are for a system with does not have the APS, HAC and Enhanced T1 CSU Feature Option Keys enabled.*

To configure a T1/E1 Link, follow the procedure below.

1. From the DNX-1u Main Menu, click on **Configuration**, **Subsystem Profile** and then on **T1E1-A** or **T1E1-B**.

   The selected T1E1 Configuration screen is displayed.

Figure 5-3: *T1/E1 Link Configuration Screen*

```
System ID:                                                          Help = [?]
Sycamore Networks, Inc.           DNX-1u

                   Unit #1   T1E1-A Configuration

                                                            Network  Yel    Idle
#       Link Name            Framing        FDL   LH/LBO    Loop     Alarm  Code
-  -------------------- -----------------  ------ -------  -------  -----  ----
1  Link 01              T1 ESF B8ZS        54016   0.0db   Disable   No     Busy
2  Link 02              T1 ESF B8ZS        54016   0.0db   Disable   No     Busy
3  Link 03              T1 ESF B8ZS        54016   0.0db   Disable   No     Busy
4  Link 04              T1 ESF B8ZS        54016   0.0db   Disable   No     Busy





LH - long haul        LBO - line build out[T1 only]     FDL - facility data link



[A]PS view                                          [C]opy cfg to all
```

2. From this screen you can press **C** to copy the selected link's configuration to all other links for that Quad T1/E1 Module.
3. To change parameters for an individual link, move the cursor to the link to be changed and press **Enter**.

One of the following configuration screens is displayed, depending on the DNX-1u Operation Mode (T1 or E1).

Figure 5-4: *Individual Link Configuration Screen (T1 Example)*

```
System ID:                                                          Help = [?]
Sycamore Networks, Inc.           DNX-1u

                   Unit #1   T1E1-A    Link Configuration

                   Link Number..........: 1
                   Name................: Link 01
                   Status..............: In Service
                   Cross-connect Mode...: 1-0
                   Line Type...........: T1 ESF B8ZS
                   Recover Time........: 3 seconds
                   Network Loop........: Disabled
                   Tx Yel Alm/RAI......: No
                   Unused TS...........: Busy
                   ESF format..........: 54016
                   Line Build Out......: 0.0db <> Long Haul
                   Rx Mode.............: Normal
                   Rapid Trunk Condition: Disable
```

Figure 5-5: *Individual Link Configuration Screen (E1 Example)*

```
System ID:                                                          Help = [?]
Sycamore Networks, Inc.           DNX-1u

                   Unit #1   T1E1-A    Link Configuration

                   Link Number..........: 1
                   Name................: Link 01
                   Status..............: Out of Service
                   Cross-connect Mode...: 1-0
                   Line Type...........: E1
                   Long Haul...........: S-Haul
                   Tx Yel Alm/RAI......: No
                   Unused TS...........: Busy
                   Rapid Trunk Condition: Disable
                   E1 National Bits.....:
                   Sa4: 1  Sa5: 1  Sa6: 1  Sa7: 1  Sa8: 1
                   E1 International Bits: 01
                   Si..................: 1
```

4. Populate this screen with specific subsystem information. For information on these fields, refer to the following section *Field Descriptions*.
5. When complete press **X**.

   A message is displayed asking if you want to update the configuration.

6. Press **Y**.

   The subsystem information is configured.

Field Descriptions

Table 5-1 lists the field descriptions to configure a T1E1 Subsystem.

Table 5-1: *Individual Link Configuration Field Descriptions*

Field	Description
Link Number: *(display field)*	Displays the Link Number, from *1* to *4*, for each Quad T1/E1 module for the T1 or E1 link you are configuring.
Name: *(text field)*	Specifies a name to identify each T1 or E1 link, up to 20 alphanumeric characters. It is recommended to use circuit numbers to name the links. The default is *Link XX*, where XX = the link number. ***Note:*** *Do not use a dollar sign ($) as part of a link name. Using a dollar sign ($) may cause the link name to be truncated in the Event Log.*
Status: *(option field)*	Specifies the state of the link, the choices are: • *In Service* - The link is active. When the link is *In Service*, Diagnostics can be run. • *Out of Service* - The link is not in use. The *Out of Service* Mode suppresses false alarms that would otherwise be generated by the absence of a received signal. Also, all receive and transmit path timeslots in the link are set from *Busy* to *Idle*. You cannot run diagnostics when a link is *Out of Service*.
Cross-connect Mode: *(option field)*	Determines the Cross-Connect Mode for the port, the choices are: • *1-0*: One-Zero Mode (Channelized T1/E1). Framing is terminated and regenerated. Uses standard framing pattern and detects all alarms/errors. Clear Mode is turned off. All diagnostic functions are available. • *1-1 Framed*: One-One Mode Framed: Monitored full T1 (25 DS0s) or full E1 (32 DS0s). Framing is conveyed through the switch fabric. Allows alarms and statistics to be displayed. • *1-1 Unframed*: One-One Mode Unframed: Full T1 (25 DS0s) or E1 (32 DS0s). Full bandwidth of the frame is used for data. Passes data without keeping track of alarms and statistics. Limited diagnostics functions are available ***Note:*** *When using 1-1 Framed T1 (E1) Mode, make the connection ensuring that 25 (32) DS0s have connections mapped. This is necessary because of the way Clear T1 Mode operates, taking the framing bits from the first 24 (31) DS0s and sending them all out through the 25th (32nd) DS0. Refer to "Connection Maps" in Section 6 for details on connection mapping.*

Table 5-1: *Individual Link Configuration Field Descriptions (Continued)*

Field	Description
Line Type: *(option field)*	Determines the type of framing used on the line. The available line types are dependent upon the cross-connect mode selected. The choices are: • *T1 ESF B8ZS* (1-0 and 1-1 Framed Modes) • *T1 ESF AMI* Density (1-0 and 1-1 Framed Modes) • *T1 ESF AMI* (1-0 Mode) • *T1 D4 B8ZS* (1-0, and 1-1 Framed Modes) • *T1 D4 AMI* (1-0 Mode) • *T1 D4 AMI* Density (1-0, and 1-1 Framed Modes) • *T1 B8ZS* (1-1 Unframed Mode) • *T1 AMI* (1-1 Unframed Mode) • *E1* (1-0, 1-1 Framed, and 1-1 Unframed Modes) • *E1-CRC* (1-0 and 1-1 Framed Modes) • *E1-CAS* (1-0 and 1-1 Framed Modes) • *E1 CAS-CRC* (1-0 and 1-1 Framed Modes) ***Note:*** *For the FDL to operate, the Line Type must be set to either: T1 ESF, E1 CAS-CRC, or E1-CRC. T1 B8ZS (1-1 Unframed Mode) links do not recognize Alarm Indicator Signal (AIS). These unframed links ignore AIS and pass it through to the far-end equipment, which recognizes and generates an AIS alarm.*
Recover Time: *(T1 option field)*	Specifies how quickly Red/Yellow alarms are cleared following the recovery of the given T1 facility. For example, a valid signal and framing present. The choices are: *0*, *3*, *10*, or *15* seconds. ***Note:*** *The Recover Time option field is available only with T1 line types.*
Network Loop: *(T1 option field)*	Determines the T1 Port's ability to respond to diagnostic commands received from the network supplier. The choices are: • *Enabled* indicates the port will respond to loop commands received from the network supplier. • *Disabled* indicates that it will not respond. ***Note:*** *The Network Loop option field is available only with T1 line types.*
Tx Yel Alm/RAI: *(option field)*	A *Yes* will cause a T1 circuit to discard data and send a Yellow alarm if it is in a Red alarm condition for the number of seconds selected in the Recover Time field. ***Note:*** *Not available for Clear T1/E1 Unframed configurations.* ***Note:*** *The Yellow Alarm is not transmitted upstream in clear T1 mode (framed or unframed) whether this parameter is set to Yes or No.*
Long Haul: *(E1 option field)*	Specifies the *L-Haul* (Long Haul) physical interface selection for a long connection to E1 equipment, while *S-Haul* (Short Haul) is the physical interface selection for co-located E1 equipment. ***Note:*** *The Long Haul and Short Haul line interface options are available only with E1 line types. Long Haul/Short Haul designations for E1 are defined by authentication of signal displayed to the receiving circuitry, not by cable length. Short Haul is defined as 0 to -6db, and Long Haul as 0 to -34db. This loss is related to cable type and cable length.*
Rapid Trunk Condition: *(T1 option field)*	Specifies Rapid Trunk Conditioning. The choices are: *Enable* or *Disable*. The default is *Disable*. ***Note:*** *Not available for Clear T1/E1 Unframed configurations.*

Table 5-1: *Individual Link Configuration Field Descriptions (Continued)*

Field	Description
Unused TS: *(option field)*	Specifies the state of unused timeslots The choices are: • *Idle* - The hex value 7F (01111111) is sent. • *Busy* - The hex value FF (11111111) is sent. ***Note:*** *Not available for Clear T1/E1 Unframed configurations.*
ESF Format: *(T1 option field)*	Specifies the type of T1 ESF network commands to which the T1 port will respond. It is not applicable to D4 networks. With ESF networks, this information must be obtained from the network supplier. The choices are: • *54016 (*AT&T Technical Reference 54016) • *T1.403* (ANSI specification T1.403). ***Note:*** *The ESF Format option field is available only with T1 line types.*
Line Build Out: *(T1 option field)*	Sets the line attenuation level. It should be set to *0 dB* (no attenuation) unless the network supplier specifically requests otherwise. The choices are: • *0.0db <> Long Haul* • *7.5db <> Long Haul* • *15.0db <> Long Haul* • *22.5db <> Long Haul* • *0-133 Ft. <> Short Haul* • *133-266 Ft. <> Short Haul* • *266-399 Ft. <> Short Haul* • *399-533 Ft. <> Short Haul* • *533-655 Ft. <> Short Haul* ***Note:*** *The Line Build Out option field is available only with T1 line types.*
Rx Mode: *(T1 option field)*	Provides a way to adjust RX sensitivity for a configured link to meet special situational needs. The valid selections are applicable for a T1 Link. For an E1 Link the default selection is denoted as Normal and is not configurable. The choices are: • *Normal* - Used for hot signals with improved Rx Sensitivity and is used frequently. • *Special1* - Used for hot signals with limited Rx Sensitivity for unusually strong signals. • *Special2* - Used in special cases for hot signals with improved Rx Sensitivity. ***Note:*** *The Rx Mode option field is available only with T1 line types.*

E1 National Bits:
(E1 option fields)
	Enables the E1 National S-bits to be set to zero or one. This single byte field can be changed to set the values of the E1 NFA byte in odd frames as depicted below:
	`sa8 sa7 sa6 sa5 sa4 reserved bits`
	`--- --- --- --- --- -------------`
	` 1  1  1  1  1  0  0  0 = F8 (default)`
	Note: *The E1 National Bits option field is available only with E1 line types.*

E1 International Bits:
(E1 option field)
	Enables the InterNational S(i) Spare bit to be set to zero or one. This single byte field can be changed to set the values of the Bit 1 of TS0 G.704 frame as depicted below:
	`reserved bits  S(i)`
	`-------------------------- ----`
	`0  0  0  0  0  0  0  1  = 01 (default)`
	Note: *The E1 International Bits option field is available only with E1 line types.*

Table 5-1: *Individual Link Configuration Field Descriptions (Continued)*

Field	Description
	APS Fields
Function: *(option field)*	Specifies the function of the link. The choices are: • *Unprotected* - A link not configured for APS • *Working* - The primary link that carries traffic • *Protection* - The backup link that will be switched to when the Working Link is non-operational
Threshold Profile Id: *(option field)*	Specifies one of eight profiles configured using the Link APS Threshold Profiles Menu. These profiles are used to set the conditions that need to be met to initiate a link switchover.
Protection Link: *(option field)*	Indicates the link to protect the Working Link should a failure occur, from one of eight links. However, you can not select the link that is set as the Working Link. Once the Protection Link is designated, go to the link and configure it.
Mode: *(option field)*	Selects the APS Mode. The choices are: • *1+1* - Working Link traffic is bridged onto the Protection Link. Each end independently monitors the links and determines which link is healthier to use for traffic receipt. • *1:1* - Allows Protection Link to carry low priority traffic until it is needed to protect the Working Link. End-to-end communication coordinates the switchover between Working and Protection Links. Low priority traffic on the Protection Link will either be pre-empted or merged depending upon the timeslot availability between the Protection and Working Links. ***Note:*** *When changing APS Mode from 1:1 to 1+1; always use the following steps to avoid errors:* 1. Go to the working link and unprotect it. 2. Go to the protection link and unprotect it. 3. Go back to the first unprotected link (original working link) and make it a working link again. 4. Go back to the second unprotected link (original protection link) and make it a protection link and select 1+1.
Revertive Mode: *(option field)*	Selects the status of revertive switching. The choices are: • *Enable* returns traffic from the Protection Link to the Working Link should it recover • *Disable* the traffic on the Protection Link will not switch back to the Working Link even if the Working Link recovers
Switching Mode: *(option field)*	Selects an APS switchover method. The choices are: • *Auto* - Automatic switchover to the Protection Link will occur should the Working Link fail • *Force Protection Online* - Forces an immediate switchover from the Working Link to the Protection Link • *Force Working Online* - Forces an immediate switchover from the Protection Link to the Working Link

Adding a Subsystem

If not already installed, an additional Quad T1E1 or Power Supply Module can be added to the DNX-1u. To add a subsystem, follow the procedure below.

1. Install the new Quad T1E1 or Power Supply Module in an empty slot.
2. From the DNX-1u Main Menu, click on **Configuration** and then on **Subsystem Profile**.

   The Subsystem Profile screen is displayed.
3. Move your cursor to the new Quad T1/E1 or Power Supply slot and press **A** to add this module.

Note: *The new module may be detected automatically by the DNX-1u.*

Removing a Subsystem

To delete a subsystem, follow the procedure below.

1. Remove the Quad T1E1 or Power Supply Module.
2. From the DNX-1u Main Menu, click on **Configuration** and then on **Subsystem Profile**.

   The Subsystem Profile Menu is displayed.
3. Cursor to the empty slot and press **R** to remove this module.

Configuring/Viewing APS Links

Note: *The example below are for a system with the APS Feature Option Key enabled.*

To configure/view APS links for a T1/E1 Link, follow the procedure below.

1. From the DNX-1u Main Menu, click on **Configuration**, **Subsystem Profile** and then on **T1E1-A** or **T1E1-B**.

   The selected T1E1 Configuration screen is displayed.
2. Select a link and press **Enter**.

   The selected link information is displayed.
3. To view APS information, press **Esc** to move back to the APS Configuration Menu.
4. Position your cursor on the link you want to view and then press **A** go to the APS view.

   An APS Configuration screen is displayed.

Figure 5-6: *View APS Configuration Screen*

```
System ID: DNX-1u No. 1                                          Help = [?]
Sycamore Networks, Inc.           DNX-1u

                   Unit #1   T1E1-A    APS Configuration

                                            Threshold        Revertive  Switching
#        Framing       Function-PL         Profile    Mode  Mode       Mode
-  ------------------  ----------------    ---------  ----  ---------  ---------
1  T1 ESF B8ZS         Protection              1      1+1   Enable     Auto
2  T1 ESF B8ZS         Protection              1      1+1   Enable     Auto
3  T1 ESF B8ZS         Unprotected             1
4  T1 ESF B8ZS         Unprotected             1





PL - protection link   FWO - force working online  FPO - force protection online



[A]PS view             [C]opy cfg to all
```

5. The APS view allows you to view the APS configuration for the links and also toggle between the T1/E1 Link and APS.

Note: *You can also change parameters for an individual link from this menu by selecting a link and pressing* ***Enter****. See Table 5-1 for Link Configuration field descriptions.*

Note: *APS fields should not be changed if you are not planning on utilizing T1/E1 APS functionality. The Function field should be left as* ***Unprotected****.*

6. Populate this screen with specific subsystem information. For information on these fields, refer to the following section *Field Descriptions*.
7. When complete press **X**.

   A message is displayed asking if you want to update the configuration.
8. Press **Y**.

   The subsystem information is configured.

Field Descriptions

Table 5-2 lists the field descriptions to View/Configure APS Links.

Table 5-2: *View APS Configuration Field Descriptions*

Field	Description
# **(Link Number):** *(display field)*	Displays the Link Number (*1* to *4* for each Quad T1/E1 Module) of the T1 or E1 link that you are configuring.
Framing: *(display field)*	Displays the type of framing used on the line or *Out of Service* if the link is not in service. The choices are: • *T1 ESF B8ZS* (1-0 and 1-1 Framed Modes) • *T1 ESF AMI Density* (1-0 and 1-1 Framed Modes) • *T1 ESF AMI* (1-0 and 1-1 Unframed Modes) • *T1 D4 B8ZS* (1-0, 1-1 Framed, and 1-1 Unframed Modes) • *T1 D4 AMI Density* (1-0, 1-1 Framed, and 1-1 Unframed Modes) • *T1 D4 AMI* (1-0 and 1-1 Unframed Modes) • *T1 B8ZS* (1-1 Unframed Mode) • *T1 AMI* (1-1 Unframed Mode) • *E1* (1-0, 1-1 Framed, and 1-1 Unframed Modes) • *E1-CRC* (1-0 and 1-1 Framed Modes) • *E1-CAS* (1-0 and 1-1 Framed Modes) • *E1 CAS-CRC* (1-0 and 1-1 Framed Modes) ***Note:*** *T1 B8ZS (1-1 Unframed Mode) links do not recognize Alarm Indicator Signal (AIS). These unframed links ignore AIS and pass it through to the far-end equipment, which recognizes and generates an AIS alarm.*
Function-PL: *(display field)*	Displays the configured APS function of the link. The choices are: • *Unprotected* - The link is not configured for APS. • *Working* - The primary link that carries traffic. This will be followed by a text string indicating protection link associated with this Working Link. Example: *Working-T1E1-A:2* indicates the Working Link is being protected by Link 2 in T1E1 module A. • *Protection* - Indicates the link is configured as a backup link that will be switched to when the Working Link is non-operational.
Threshold Profile: *(display field)*	Displays the profile ID number for the APS Threshold Profile that is assigned to this link.
Mode: *(display field)*	Displays the current APS Mode. The choices are: • *1+1* - The Working Link traffic is bridged onto the Protection Link. Each end independently monitors the links and determines which link is healthier to use for traffic receipt. • *1:1* - Allows Protection Link to carry low priority traffic until it is needed to protect the Working Link. End-to-end communication coordinates the switchover between Working and Protection Links. Low priority traffic on the Protection Link will either be pre-empted or merged depending upon the timeslot availability between the Protection and Working Links.

Table 5-2: *View APS Configuration Field Descriptions (Continued)*

Field	Description
Revertive Mode: *(display field)*	Displays the revertive switching status. The choices are: • *Enable* - Will return traffic from the Protection Link to the Working Link if it recovers. • *Disable* - The traffic on the Protection Link will not switch back to the Working Link even if the Working Link recovers.
Switching Mode: *(display field)*	Displays the selected APS switchover method. The choices are: • *Auto* - Automatic switchover to the Protection Link will occur should the Working Link fail. • *FPO* (Force Protection Online) - Forces an immediate switchover from the Working Link to the Protection Link. • *FWO* (Force Working Online) - Forces an immediate switchover from the Protection Link to the Working Link.

Enhanced T1/CSU Link Configuration

The T1/CSU links are configured by selecting links in Quad T1/E1 module A or B.

Configuring T1/E1 Link Configuration

Note: *The examples below are for a system with the Enhanced T1 CSU Feature Option Key enabled.*

To configure a T1/CSU Link, follow the procedure below.

1. From the DNX-1u Main Menu, click on **Configuration**, **Subsystem Profile** and then on **T1E1-A** or **T1E1-B**.

   The selected T1/E1 Configuration screen is displayed.

Figure 5-7: *T1/E1 Configuration Screen*

```
System ID:                                                          Help = [?]
Sycamore Networks, Inc.           DNX-1u

                   Unit #1   T1E1-A Configuration

                                                            Network  Yel    Idle
#       Link Name            Framing        FDL   LH/LBO    Loop     Alarm  Code
-  -------------------- -----------------  ------ -------  -------  -----  ----
1  Link 01              T1 ESF B8ZS        54016   0.0db   Disable   No     Busy
2  Link 02              T1 ESF B8ZS        54016   0.0db   Disable   No     Busy
3  Link 03              T1 ESF B8ZS        54016   0.0db   Disable   No     Busy
4  Link 04              T1 ESF B8ZS        54016   0.0db   Disable   No     Busy




LH - long haul        LBO - line build out[T1 only]     FDL - facility data link



[A]PS view                                          [C]opy cfg to all
```

2. From this screen you can press **C** to copy the selected link's configuration to all other links for that Quad T1/E1 Module.

3. To change parameters for an individual link, move the cursor to the link to be changed and press **Enter**.

   The Link Configuration screen is displayed.

Figure 5-8: *Individual Link Configuration Screen*

```
System ID:                                                          Help = [?]
Sycamore Networks, Inc.           DNX-1u

                   Unit #1   T1E1-A    Link Configuration

                   Link Number...........: 2
                   Name..................: Link 02
                   Status................: In Service
                   Cross-connect Mode....: 1-0
                   Line Type.............: T1 ESF B8ZS
                   Recover Time..........: 3 seconds
                   Network Loop..........: Disabled
                   Tx Yel Alm/RAI........: No
                   Unused TS.............: Busy
                   ESF format............: 54016
                   Line Build Out........: 0.0db <> Long Haul
                   Rx Mode...............: Normal
                   Rapid Trunk Condition.: Disable
                 Threshold Profile Id.:1
```

4. Populate this screen with specific subsystem information. For information on these fields, refer to the following section *Field Descriptions*.
5. When complete press **X**.

   A message is displayed asking if you want to update the configuration.
6. Press **Y**.

   The subsystem information is configured.

Field Descriptions

Refer to Table 5-1 for field descriptions to configure T1/CUS Links.

Rapid Trunk Conditioning

Rapid Trunk Conditioning (RTC) is configured on a connection map basis; however, it can be enabled/disabled on a link-by-link basis for both voice and data. When enabled, RTC immediately applies an initial signalling and payload pattern within 30 milliseconds upon link failure detection, instead of the standard 2.5 seconds specified by Telcordia for normal trunk conditioning.

The DNX-1u can assign from 1 to 16 different connection map level Trunk Conditioning Profiles.

The removal of Rapid Trunk Conditioning is in accordance with the existing process if Red Alarm is declared and subsequently cleared. If Red Alarm is never declared and trunk conditioning was initiated, then it must be removed within 4 seconds. The criteria for declaring trunk conditioning is Loss of Signal (LOS), Loss of Frame (LOF), Alarm Indication Signal (AIS), or Yellow Alarm. Note, that clear-channel T1 connections (1-1) will send an AIS and not a Trunk Conditioning alarm.

RTC can be enabled/disabled from the T1E1 Link Configuration Menu and also using SNMP.

Note: *For E1 configurations, this feature does not support 1-1 framed and unframed modes. Trunk conditioning profiles; start, end, payload profile data can be set for E1 configurations.*

Enabling Rapid Trunk Conditioning

To enable Rapid Trunk Conditioning for a T1/E1 Link, follow the procedure below.

1. From the DNX-1u Main Menu, click on **Configuration**, **Subsystem Profile** and then on **T1E1-A** or **T1E1-B**.

   The selected T1E1 Configuration screen is displayed.

2. To enable Rapid Trunk conditioning for an individual link, move the cursor to the link to be changed and press **Enter**.

   One of the following configuration screens is displayed, depending on the DNX-1u Operation Mode (T1 or E1).

3. Cursor to the *Rapid Trunk Conditioning* field and press **Enter** until this field is set to *Enable*.
4. When complete press **X**.

   A message is displayed asking if you want to update the configuration.

5. Press **Y**.

   The selected link is now enabled with Rapid Trunk Conditioning.

Field Descriptions

Refer to Table 5-1 for field descriptions to enable Rapid Trunk Conditioning.

Disabling Rapid Trunk Conditioning

To disable Rapid Trunk Conditioning for a T1/E1 Link, follow the procedure below.

1. From the DNX-1u Main Menu, click on **Configuration**, **Subsystem Profile** and then on **T1E1-A** or **T1E1-B**.

   The selected T1E1 Configuration screen is displayed.

2. To enable Rapid Trunk conditioning for an individual link, move the cursor to the link to be changed and press **Enter**.

   One of the following configuration screens is displayed, depending on the DNX-1u Operation Mode (T1 or E1).

3. Cursor to the *Rapid Trunk Conditioning* field and press **Enter** until this field is set to *Disable*.
4. When complete press **X**.

   A message is displayed asking if you want to update the configuration.

5. Press **Y**.

   Trunk conditioning is now disabled for the selected link.

Field Descriptions

Refer to Table 5-1 for field descriptions to disable Rapid Trunk Conditioning.

Router Subsystem

This section will guide you through configuring the Router Subsystem.

Router Configuration Menu

The Router Subsystem can be configured by selecting ROUTER from the Subsystem Profile Menu.

Navigation:
DNX-1u Main Menu ↓ Configuration ↓ Subsystem Profile ↓ Select ROUTER ↓ **[Enter]** Subsystem Cfg

Configuring the Router Subsystem

Only DS0-level data can be cross-connected to the Router. If cross-connecting a logical WAN to a T1/E1 port, the selected T1/E1 port must be in for 1-0 cross-connect mode.

To configure the Router Subsystem, follow the procedure below.

1. From the DNX-1u Main Menu, click on **Configuration**, **Subsystem Profile** and then on **ROUTER**.

   The Router Configuration screen is displayed.

Note: *If the Advanced Routing Option Feature Key is enabled, the IP and OSPF menu is displayed. Otherwise, the IP Menu is displayed.*

Figure 5-9: *Router Configuration Screen*

```
System ID: DNX-1u No. 1                                          Help = [?]
Sycamore Networks, Inc.          DNX-1u

                              Router Configuration

                             LAN
                             WAN
                             Logical Port Summary
                             IP
                             DHCP Server
                             DHCP/Bootp Relay
```

Figure 5-10: *Router Configuration Screen - Advanced Routing Feature Activated*

```
System ID: DNX-1u No. 1                                          Help = [?]
Sycamore Networks, Inc.          DNX-1u

                              Router Configuration

                             LAN
                             WAN
                             Logical Port Summary
                             IP and OSPF
                             DHCP Server
                             DHCP/Bootp Relay
```

The Router Configuration screen provides access to six submenus. From these submenus, you can view and change configuration parameters for the Router Subsystem.

2. Refer to the following sections for additional configuration parameters: (check)
   - LAN Configuration
   - WAN Configuration
   - Logical Port Configuration
   - IP
     - IP Filter Selection
     - IP Configuration
     - IP Route Table Configuration
     - IP Filter Configuration
     - Secondary Address Configuration
     - Network Address Translation Configuration
     - Static Port Address Translation Configuration
     - XOT Address Translation Configuration
     - Options Configuration
   - IP and OSPF (if the Advanced Routing Feature option is activated)
     - OSPF Area Configuration
     - OSPF Circuit Configuration
     - OSPF Virtual Link Configuration
     - OSPF Range Configuration
     - Static Route Filters
     - OSPF Route Filters
     - RIP Route Filters

LAN Configuration

This section will guide you through configuring the LAN port.

Navigation:
DNX-1u Main Menu ↓ Configuration ↓ Subsystem Profile ↓ Select ROUTER ↓ **[Enter]** Subsystem Cfg ↓ LAN

Configuring LAN Ports

To configure a LAN port, follow the procedure below.

1. From the DNX-1u Main Menu, click on **Configuration**, **Subsystem Profile** and then on **ROUTER**.

   The Router Configuration screen is displayed.

2. Move your cursor to LAN and press **Enter**.

   The LAN Configuration screen is displayed.

Figure 5-11: *LAN Configuration Screen*

```
System ID: DNX-1u No. 1                                          Help = [?]
Sycamore Networks, Inc.           DNX-1u
                              LAN Configuration

LAN port configuration
----------------------
IP encapsulation...: Ethernet II



Detected Encapsulations                 Detected Protocols
-----------------------                 ------------------
IP encapsulation...: Ethernet II        IP................: Yes
                                        ARP...............: Yes
```

3. Populate this screen with specific subsystem information. For information on these fields, refer to the following section *Field Descriptions*.
4. When complete press **X**.

   A message is displayed asking if you want to update the configuration.
5. Press **Y**.

   The subsystem information is configured.

Field Descriptions

Table 5-3 lists the field descriptions to configure a LAN port.

Table 5-3: *LAN Configuration Field Descriptions*

Field	Description
LAN PORT CONFIGURATION A LAN interface that carries IP traffic may contain an LLC (Logical Link Control) layer in addition to the MAC header. This information is used to identify the upper layer protocol encapsulated in the packet. These parameters must be configured for routing applications only.	
IP encapsulation: *(option field)*	The only IP encapsulation supported is *Ethernet II*. This encapsulation should match the encapsulation used by other devices attached to the Ethernet ports.
DETECTED ENCAPSULATIONS AND DETECTED PROTOCOLS These fields are read-only and indicate if the LAN ports “see” the packets. For example, if the cable attached is properly as well as displaying the encapsulation used on the network.	
IP Encapsulation: *(display field)*	Indicates the type of IP encapsulation that is detected on the LAN. Only *Ethernet II* encapsulation is supported.
IP: *(display field)*	A *Yes* indicates that IP Protocol is detected.
ARP: *(display field)*	A *Yes* indicates that Address Resolution Protocol is detected.

WAN Configuration

The WAN Configuration Menu allows you to assign timeslots for WAN connections and parameters.

Navigation:

DNX-1u Main Menu
↓
Configuration
↓
Subsystem Profile
↓
Select ROUTER
↓
[Enter] Subsystem Cfg
↓
WAN

Configuring WAN Ports

CAUTION

When configuring a WAN port, it may impact data on other WAN links.

To configure a WAN port, follow the procedure below.

1. From the DNX-1u Main Menu, click on **Configuration**, **Subsystem Profile** and then on **ROUTER**.

   The Router Configuration screen is displayed.

2. Move your cursor to WAN and press **Enter**.

   The WAN Configuration screen is displayed.

Figure 5-12: *WAN Configuration Screen*

```
System ID:                                                        Help = [?]
Sycamore Networks, Inc.           DNX-1u
                               WAN Configuration

                              Time Slot Allocation

TS  Interface        TS  Interface        TS  Interface       TS  Interface
--  ---------        --  -----------          ---------       --  ---------

01  WAN 1            09  Not Assigned     17  Not Assigned    25  Not Assigned
02  WAN 2            10  Not Assigned     18  Not Assigned    26  Not Assigned
03  Not Assigned     11  Not Assigned     19  Not Assigned    27  Not Assigned
04  Not Assigned     12  Not Assigned     20  Not Assigned    28  Not Assigned
05  Not Assigned     13  Not Assigned     21  Not Assigned    29  Not Assigned
06  Not Assigned     14  Not Assigned     22  Not Assigned    30  Not Assigned
07  Not Assigned     15  Not Assigned     23  Not Assigned    31  Not Assigned
08  Not Assigned     16  Not Assigned     24  Not Assigned    32  Not Assigned



[C]onfigure interface
```

3. To configure a timeslot interface press **Enter** until the interface type you want is displayed.
4. Press **C** to configure the WAN port.

   The WAN Virtual Port Configuration screen is displayed.

Figure 5-13: *WAN Virtual Port Configuration Screen (Port 1)*

```
System ID:                                                        Help = [?]
Sycamore Networks, Inc.             DNX-1u
                       WAN Virtual Port Configuration

Virtual port.......: WAN 1

Enabled............: Enabled         Port ID............:
DS0 Mode...........: Nx56            Multilink bundle ID: 0
Encapsulation......: PPP


Frame relay parameters...            Authentication parameters...

Management.........: None            Username.........: none
User/Network side..: User            Password/secret..: none
Full status..(N391): 6               Authentication required: No
Threshold....(N392): 3               Authentication protocol: CHAP
Events.......(N393): 4
Integrity....(T391): 10
Verification.(T392): 15              [L]APB Configuration
Multicast DLCI.....: 0
```

Note: *The screen for the first port is different from subsequent ones because it includes the frame Relay parameters. Figure 5-14 illustrates this screen for ports 2 through 14.*

Figure 5-14: *WAN Virtual Port Configuration Menu (Ports 2 to 14)*

```
System ID:                                                        Help = [?]
Sycamore Networks, Inc.           DNX-1u
                        WAN Virtual Port Configuration

Virtual port...........: WAN 2

Enabled................: Enabled      Port ID............:
DS0 Mode...............: Nx56         Multilink bundle ID: 0
Encapsulation..........: PPP


Authentication parameters...

Username...............: none
Password/secret........: none
Authentication required: No
Authentication protocol: CHAP


                                     [L]APB Configuration
```

5. Populate this screen with specific subsystem information. For information on these fields, refer to the following section *Field Descriptions*.
6. When complete press **X**.

   A message is displayed asking if you want to update the configuration.
7. Press **Y**.

   The subsystem information is configured.

Note: *In addition to the other speeds available for HSS ports (56 kbps or 64 kbps), the DS0 Mode for XOT ports is 8 kbps or 16 kbps.*

24/32 DS0 Clear T1/E1 Routing

Note: *In order to configure the DNX-1u for 24/32 DS0 Clear T1/E1 Routing, this feature must be enabled through the Basic Routing Option Feature Key. This feature is available using the embedded menus and also through SNMP.*

The DNX-1u allows you to configure up to 14 PPP, PPP Multi-Link (PPP-MLP) or High-Level Data Link Control (HDLC) encapsulated WAN channels and map them to up to 24 T1 or 32 E1 timeslots per system. This feature is primarily used in applications that require compatibility with un-channelized (clear) T1/E1 routers located at the head-end of the network.

Timeslots 1-32 can be mapped to WAN interfaces 1-14.

Note: *The total DS0s in all PPP/MLP/HDLC connections on the system can not exceed 32 timeslots.*

Field Descriptions

Table 5-4 lists the field descriptions to configure a WAN port.

Table 5-4: *WAN Configuration Field Descriptions*

Field	Description
Virtual Port: *(display field)*	Displays the WAN port being configured. The values are *WAN 1* to *WAN 14*.
Enabled: *(option field)*	Enables or disables the WAN interface. *Enabled* indicates the interface is operational. If the network to which the connection is attached to goes down, an alarm will be generated and the DNX-1u Ready indicator (RDY) will illuminate RED. *Disabled* indicates the interface is not operational. Even if you have mapped the WAN connection to the Router Subsystem, the WAN connection will not be operational if this parameter is set to *Disabled*. *Enabled* is the default setting. ***Note:*** *This setting affects the full bandwidth of the virtual WAN interface and is not limited to the individual timeslot the command is executed within.*
DS0 Mode: *(option field)*	Adjusts the speed of the timeslots associated with this virtual WAN interface. The choices are: • *8k* - Intended for legacy X.25 devices that only support transmission speeds of 8 kbps. • *16k* - Intended for legacy X.25 devices that only support transmission speeds of 16 kbps. ***Note:*** *8 kbps and 16 kbps are only allowed between synchronous ports and router.* • *Nx56* - The Nx56 kbps setting should be used when data applications are expected to traverse a circuit that uses robbed-bit signalling. • *Nx64* - Nx64 kbps settings should be used when the transport path is expected to use out-of-band signalling.
Encapsulation: *(option field)*	Sets the layer-2 protocol used on the virtual WAN interface. *PPP* is the default setting. The choices are: • *PPP* - Point-to-Point Protocol establishes a connection using the Point-to-Point (PPP) protocol as defined in RFC 1548. • *Multilink PPP* - Multilink PPP, as defined in RFC 1717, establishes a PPP connection using multiple WANs as a single aggregate. • *Frame Relay* (WAN 1 only) - This protocol establishes a connection using Frame Relay services. Frame relay is a multiplexing protocol designed to operate over transmission facilities that are essentially error-free. Frame relay services combine the bandwidth efficiency of packet switching with increased speed and performance. • *XOT over LAPB* - XOT (X25 over TCP) protocol tunnels X.25 traffic received over a LAPB link, through a TCP/IP network. LAPB (Link Access Procedure, Balanced) is a layer 2 protocol used to carry X.25 packets. ***Note:*** *Only WAN 1 can be configured with Frame Relay protocol.*
Port ID: *(text field)*	Used to identifier information for the administrator, up to 19 alphanumeric characters. It is not used by the DNX-1u in any mode. This field can be used to record a logical interface's intended pathway or use. It is also readable using SNMP, and is stored in the configuration file options for the logical interface.
Multilink bundle ID: *(option field)*	Used by the DNX-1u to differentiate one Multilink PPP bundle from another. The bundle ID must be unique for each Multilink PPP session within the DNX-1u. This bundle ID is not communicated to other devices and has no relevance. Any bundle number from *0* to *6* can be selected.

Table 5-4: *WAN Configuration Field Descriptions (Continued)*

Field	Description
FRAME RELAY PARAMETERS (AVAILABLE FOR WAN 1 ONLY) ***Note:*** *The Frame Relay parameters at the bottom of the screen are only valid when Encapsulation is set to Frame Relay, and should remain in their default states when another protocol is used.*	
Management: *(Frame Relay option field)*	Frame Relay parameter available only on WAN 1. This option allows you to select one of three different management schemes, or you can elect to have no management scheme. The choices are: • *ANSI T1.617D* • *CCITT Q.933A* • *LMI* (Local Management Interface) • *None* ***Note:*** *If None is selected, all other frame relay parameters are irrelevant.* Select the option your service provider specifies. For example, select *None* for applications where two units are connected end-to-end and no public Frame Relay switch is in the network between the local and remote sites. The default setting is *ANSI T1.617D*.
User/Network Side: *(Frame Relay option field)*	Frame Relay option available only on WAN 1. This setting should be configured as *User*. The *Network* setting is provided for testing purposes and allows the DNX-1u to provide partial emulation of a Frame Relay switch for the purposes of management traffic. The default setting is *User.*
Full Status (N391): *(Frame Relay text field)*	Frame Relay parameter available only on WAN 1 and valid only when User/Network side parameter is set to *User*. Adjusts the frequency at which the system requests full status information. The range is from *1* to *255*. The default value of *6* indicates the DNX-1u requests a full status on one out of every six status messages. Higher settings will reduce the overhead of the Frame Relay management traffic on a circuit.
Threshold (N392): *(Frame Relay text field)*	Frame Relay parameter available only on WAN 1. Adjusts the number of errored polls that can occur within a sliding window (adjusted by Events) before the link is declared inactive. This value must be smaller than the size of the sliding window (*Events* field). The range is from *1* to *10*. The default setting is *3*.
Events (N393): *(Frame Relay text field)*	Frame Relay parameter available only on WAN 1. Adjusts the size of the sliding window used to qualify a link, measured in status queries. Relatively large values, in combination with relatively small values in Threshold, will increase the sensitivity to errors on the link. The range is from *1* to *10* and must always be greater than the value of the *Threshold* parameter. The default setting is *4*.
Integrity (T391): *(Frame Relay text field)*	Frame Relay parameter available only on WAN 1, and valid only when User/Network side parameter is set to *User*. Sets the frequency at which the link is polled for status. Higher values will decrease the overhead of Frame Relay management traffic on the link, at the cost of increased time to discover circuit failure conditions. The selection range is from *5* to *30* seconds. A value of *10* indicates the network will be polled every *10* seconds. The default setting is *10*.
Verification (T392): *(Frame Relay text field)*	Frame Relay parameter available only on WAN 1, and valid only when User/Network side parameter is set to *Network*. Adjusts the time frame allowed for a response to a status query. The selection range is from *5* to *30* seconds. This setting should always be greater than the *Integrity* setting. The default setting is *15*.

Table 5-4: *WAN Configuration Field Descriptions (Continued)*

Field	Description
Multicast DLCI: *(Frame Relay option field)*	Frame Relay parameter available only on WAN 1. Provides bridging on Frame Relay networks that provide a Multicast Data Link Control Identifier (DLCI). Options are from *16* to *1023* and *0*. When this is configured for a value other than *0*, all broadcast and unknown destination address frames are sent on this DLCI instead of being broadcast by all of the DLCIs on the interface. If the value is set to *0*, the multicast DLCI feature is disabled on this interface. The default setting is *0*. ***Note:*** *DLCI 1023 is reserved for Consolidated Link Layer Management (CLLM) for congestion control. As a result, if this option is selected the WAN link will not become active.*
AUTHENTICATION PARAMETERS Authentication parameters are used in serial link and dialup router applications running PPP/Multi-Link PPP (PPP/MP) where increased security is required. They are used to ensure the person or device requesting access to the network is a valid client. The name and password parameters must be the same at each end. Authentication parameters can be used only with PPP/MP connections.	
Username: *(text field)*	Specifies a user name, up to 19 alphanumeric characters, used by PPP/MP during the link setup. The DNX-1u sends this field's content as part of the login sequence, as part of the Password Authentication Protocol (PAP) or Challenge Handshake Authentication Protocol (CHAP) negotiation.
Password/secret: *(text field)*	Specifies a password used by PPP/MP during the link setup, up to 19 alphameric characters. The DNX-1u sends this field's content as part of the login sequence, as part of the PAP or CHAP negotiation.
Authentication required: *(option field)*	Determines whether the DNX-1u must log into a remote device before an asynchronous serial connection can be made. The authentication is performed using an in-band protocol negotiation, such as CHAP or PAP, rather than using ASCII text, such as a terminal login. If this parameter is set to *Yes*, the DNX-1u router will use the selected authentication protocol to verify the person/device requesting access to the network is given valid access. The DNX-1u router will ensure the proper name and password have been entered. If the name and password do not match that which is programmed, access to the remote network will be denied. If authentication is not required (parameter set to *No*), the DNX-1u router will not check names and passwords.
Authentication protocol: *(option field)*	If Authentication is required for the link, this option selects which of the two in-band authentication protocols will be used: • *CHAP* (Challenge Handshake Authentication Protocol, IETF RFC1994) uses encrypted passwords and allows the authentication to be re-certified later in the session to protect against highjacking attacks on the session. *CHAP* is the default setting. • *PAP* (Password Authentication Protocol, IETF RFC1334) sends passwords "in the clear" and doesn't protect against session highjacking or brute force hacking such as attempting all combinations of a password to find the one that works. ***Note:*** *Using the same protocol at both ends is recommended; however, it is not necessary.*
[L]APB Configuration: *(option field)*	Selecting **L** will display the LAPB Configuration Menu (Figure 5-15). This menu displays the configuration screen for the LAPB protocol. Refer to "LAPB Configuration" on page 5-30 for more information on this screen.

Authentication Protocols

If Authentication is required for a link, there are two in-band authentication protocols that will be used:

- Challenge Handshake Authentication Protocol (CHAP)
- Password Authentication Protocol (PAP)

The Point-to-Point Protocol (PPP) is a Layer-2 WAN encapsulation protocol used to send IP packets over standard EIA/TIA-232 asynchronous serial data links with speeds as low as 1200 baud.The PAP and CHAP protocols are widely used methods for authenticating and securing two devices that are communicating over PPP links, such as a third party device connected over PPP to a DNX-1u asynchronous serial port. PAP or CHAP authentication is supported for PPP WAN connections configured over the DNX-1u's Asynchronous Serial ports.

CHAP Protocol

This protocol verifies the identity of the peer by using a three-way handshake. This authentication depends on a "secret" known only to the authenticator and the peer. The secret is not sent over the link. Although the authentication is only one way, you can negotiate CHAP in both directions with the help of the same secret set for mutual authentication.

If authentication is required for a PPP link, one of two in-band authentication protocols can be used:

- Challenge Handshake Authentication Protocol (CHAP)
- Password Authentication Protocol (PAP)

PAP Protocol

This protocol provides the basic form of peer authentication, in which a user's name and password are transmitted (in clear text) over the PPP link and compared to a table of name-password pairs. Typically, the passwords stored in the table are encrypted. PAP is considered less secure than CHAP.

LAPB Configuration

The Link Access Procedure Balanced (LAPB) Configuration Menu provides configuration information for the selected WAN.

Navigation:
DNX-1u Main Menu ↓ Configuration ↓ Subsystem Profile ↓ Select ROUTER ↓ **[Enter]** Subsystem Cfg ↓ WAN ↓ Select WAN ↓ **[C]onfigure** Interface ↓ **[L]APB** Configuration

Configuring an LAPB

To configure a LAPB, follow the procedure below.

1. From the DNX-1u Main Menu, click on **Configuration**, **Subsystem Profile**, **ROUTER** and then on **WAN**.

   The WAN Configuration screen is displayed.

2. Select a WAN from the *Interface* field and press **Enter**.

   The WAN Virtual Port Configuration screen is displayed.

3. Press **C**, to configure the WAN port.

4. Regardless of which WAN port is configured, the LAPB Configuration field is displayed on this screen. Press **L**, to configure LAPB.

   LAPB Configuration screen is displayed.

Figure 5-15: *LAPB Configuration Screen*

```
System ID:                                                        Help = [?]
Sycamore Networks, Inc.           DNX-1u
                        WAN Virtual Port Configuration
                            LAPB Configuration


Encapsulation.............: DCE
Modulo....................: 8
Outstanding frames.....(K): 7
Max bits...............(N1): 16384
Number of retries.....(N2): 3
Retransmission timer..(T1): 300
Ack deferral timer....(T2): 0
Disconnect timer......(T3): 600
Poll timer............(T4): 1000
Initiation action.........: sendSABM
DM received action........: sendSABM
```

5. Populate this screen with specific port information. For information on these fields, refer to the following section *Field Descriptions*.
6. When complete press **X**.

   A message is displayed asking if you want to update the configuration.
7. Press **Y**.

   The port information is configured.

Field Descriptions

Table 5-5 lists the field descriptions to configure an LAPB.

Table 5-5: *LAPB Configuration Field Descriptions*

Field	Description
Encapsulation: *(display field)*	Displays the station type for this interface, either *Data Terminal Equipment (DTE)* or *Data Communications Equipment (DCE)*.
Modulo: *(display field)*	Displays the size of the sequence numbers used to number frames.
Outstanding frames (K): *(option field)*	Specifies the maximum number of unacknowledged sequenced Protocol Data Units (PDUs) or packets that may be outstanding from this station type (DTE/DCE) at any one time. The values are *1* to *7*.
Max bits (N1): *(display field)*	Displays the maximum N1 frame size required, in number of bits, for a frame transmitted by this station type (DTE/DCE).
Number of retries (N2): *(display field)*	Displays the number of times a PDU will be resent after the T1 timer expires without an acknowledgement from the PDU.
Retransmission timer (T1): *(text field)*	Indicates the maximum time in milliseconds to wait for acknowledgement of a PDU. This is the default T1 timer. The values are from *1* to *64000*.
Ack deferral timer (T2): *(display field)*	Displays the maximum time in milliseconds to wait before sending an acknowledgement for a sequenced PDU. Zero (*0*) indicates there is no delay in acknowledgement generation. This is the default T2 timer.
Disconnect timer (T3): *(display field)*	Displays the maximum time in milliseconds to wait before considering the link disconnected. Zero (*0*) indicates the link will be considered disconnected upon completion of the frame exchange to disconnect the link. This is the default T3 timer.
Poll timer (T4): *(display field)*	Displays the maximum time in milliseconds that can elapse without frames being exchanged on the data link. A value of *2147483647* indicates that no idle timer is being kept. This is the T4 poll timer.
Initiation action: *(display field)*	Displays the action LAPB will take to initiate link set up, either *sendDISC, sendDM* or *sendSABM*.
DM received action: *(display field)*	Displays the action LAPB will take when it receives a DM response, either *sendDISC, sendDM* or *sendSABM*.

Logical Port Configuration

The parameters for each logical port for the Router Subsystem can be configured utilizing the Logical Port Summary Menu. Among those items that can be configured are logical port parameters, protocols, IP and OSPF parameters.

Note: *In order to configure Logical ports, IP Addresses and Routing Information Protocol (RIP) using CLI commands, the IP Protocol must be enabled first.*

Navigation:
DNX-1u Main Menu ↓ Configuration ↓ Subsystem Profile ↓ Select ROUTER ↓ **[Enter]** Subsystem Cfg ↓ Logical Port Summary

Configuring a Logical Port

To configure a Logical port, follow the procedure below.

1. From the DNX-1u Main Menu, click on **Configuration**, **Subsystem Profile**, and then on **ROUTER**.

   The Router Configuration screen is displayed.

2. Move your cursor to Logical Port Summary and press **Enter**.

   The Logical Port Summary screen is displayed.

Figure 5-16: *Logical Port Summary Screen*

```
System ID: DNX-1u No. 1                                          Help = [?]
Sycamore Networks, Inc.            DNX-1u
                              Logical Port Summary
Port     DLCI IRO         Port     DLCI IRO         Port     DLCI IRO
LAN          I-         n/a          --         n/a          --
ASYNC1       --         n/a          --         n/a          --
ASYNC2       I-         n/a          --         n/a          --
ASYNC3       --         n/a          --         n/a          --
ASYNC4       --         n/a          --         n/a          --
ASYNC5       --         n/a          --         n/a          --
ASYNC6       --         n/a          --         n/a          --
WAN 1        I-         n/a          --         n/a          --
n/a          --         n/a          --         n/a          --
n/a          --         n/a          --         n/a          --
n/a          --         n/a          --         n/a          --
n/a          --         n/a          --         n/a          --
n/a          --         n/a          --         n/a          --
n/a          --         n/a          --         n/a          --
n/a          --         n/a          --         n/a          --
n/a          --         n/a          --         n/a          --


NOTE: Must exit this screen            Page 1 of 5
      for settings to take effect!     Page next/prev = ['+'/'-']
```

3. The Logical Port Summary is displayed first and provides a five-page listing of every logical port. Each page summarizes 48 logical ports. From the Logical Port Summary Menu, move your cursor to the specified port entry field and press **Enter** to configure the port.

   The Logical Port Configuration screen is displayed.

Figure 5-17: *Logical Port Configuration Screen (LAN)*

```
System ID: DNX-1u No. 1                                          Help = [?]
Sycamore Networks, Inc.            DNX-1u
                         Logical Port Configuration

Logical port parameters
-----------------------
Port type........: LAN                  Protocol: Ethernet


Protocol enables                        IP parameters
----------------                        -------------
IP...............: Enabled              Port IP address..: 10.0.254.2
IP RIP...........: Disabled             Port IP mask.....: 255.255.255.0


OSPF.............: Enabled              Cost.............:0
                                        Filter...........:
                                        Side (NAT only)..: Outside
```

Figure 5-18: *Logical Port Configuration Screen (WAN)*

```
System ID: DNX-1u No. 1                                          Help = [?]
Sycamore Networks, Inc.           DNX-1u
                         Logical Port Configuration

Logical port parameters
-----------------------
Port type........: WAN 1                Protocol: Frame Relay
Frame Relay DLCI.: 16

Protocol enables                        IP parameters
----------------                        -------------
IP...............: Enabled              Port IP address..: 10.0.32.2
IP RIP...........: Disabled             Port IP mask.....: 255.255.255.0
                                        Remote IP address: 10.0.32.1
                                        Cost.............: 0
OSPF.............: Enabled              Filter...........:
                                        Side (NAT only)...: Outside
```

4. Populate this screen with specific port information. For information on these fields, refer to the following section *Field Descriptions*.

5. When complete press **X**.

   A message is displayed asking if you want to update the configuration.

6. Press **Y**.

   The port information is configured.

Note: *In order for your changes to take affect, you must exit completely out of the Logical Port Summary Menu.*

Field Descriptions

Table 5-6 lists the field descriptions to configure a Logical port.

Table 5-6: *Logical Port Configuration Field Descriptions*

Field	Description
LOGICAL PORT PARAMETERS	
Port Type: *(display field)*	Specifies the physical or virtual port on which frames are transmitted. The choices are: *LAN*, *ASYNC1- ASYNC6* or *WAN 1 - WAN 14*.
Frame Relay DLCI: *(WAN option field)*	Indicates the DLCI number if the WAN protocol selected is Frame Relay. Press **Enter** until the provider-assigned DLCI number is reached. The values are from *16 to 1023* and *0*. If the provided number is passed over, press **B** to toggle back to the assigned number. ***Note:*** The DLCI is irrelevant on all ports except for WAN1 when configured for Frame Relay. DLCI 1023 is reserved for Consolidated Link Layer Management (CLLM) for congestion control. As a result, if this option is selected the WAN link will not become active.
PROTOCOL ENABLES There are *two* protocols that can be enabled or disabled on the DLCIs. These protocols are summarized on the Logical Port Summary Menu (*IR* field) as follows: *IP Routing* and *IP RIP Routing*.	
IP: *(option field)*	Enables/disables the IP protocol support on the routers LAN interface. Must be *Enabled* for the routers LAN interface to work. The default value is *Disabled*. When is selected, an **I** is displayed in the third column of the IRO array.
IP RIP: *(option field)*	Select *Enabled* or *Disabled* to activate or deactivate IP RIP routing protocol on the routers LAN interface. Should be *Enabled* if there are routers connected to the Ethernet ports that also have an alternate path to the network. Not required if the only path to the network is the DNX-1u. If routers are NOT connected to the Ethernet ports, this should be set to *Disabled*. The default value is *Disabled*. ***Note:*** *IP RIP cannot be enabled if the IP protocol is disabled. If RIP is enabled, the default is RIP 1; however, it can be changed to RIP 2 from the IP and OSPF Configuration Menu.*
OSPF: *(option field)*	Selects the OSPF Protocol be *Enabled* or *Disabled* for LAN ports. For WAN ports the options are *Pt-to-Pt* or *P2MP*.
Protocol: *(display field)*	Displays the protocol you selected when configuring the LAN or WAN. This parameter is read-only.

Table 5-6: *Logical Port Configuration Field Descriptions (Continued)*

Field	Description
IP PARAMETERS ***Note:*** *The IP-related fields in the Logical Port Configuration Menu (Port IP Address, Port IP Mask, and Remote IP Address) should* ***NOT*** *be configured when the Protocol is XOT/LAPB.*	
Port IP Address: *(text field)*	Assigns the IP protocol address for the LAN interface. Valid entries range from *1.1.1.1* to *254.254.254.254*. The system will not allow values larger than 255, and will allow assigning the NETWORK or BROADCAST addresses for a network segment. ***Note:*** *IP addresses are not required on WAN logical ports, although they can be used if needed for compatibility with other routers.*
Port IP Mask: *(text field)*	Assigns the IP protocol network mask for the LAN interface. Valid entries range from *0.0.0.0* to *255.255.255.255*. The system will allow non-contiguous network masks.
Remote IP Address: *(WAN text field)*	This parameter is used on WAN ports only when the Fame Relay protocol is used or when unnumbered links are configured and RIP is disabled. It specifies an IP address at the remote end of the Frame Relay connection. When multiple DLCIs are configured for the same network address, the IP router needs to be able to distinguish the far end of each DLCI in order to route properly. If each DLCI is configured with a unique network address, this parameter is not required. Enter the IP address in “dotted decimal notation”. If you do not know your IP address, consult your network administrator. ***Note:*** *If the Remote Address on a Frame Relay Logical port is set to 0.0.0.0, the Router will use Inverse ARP (RFC 1293) to find the IP address of the remote end automatically. Inverse ARP is performed periodically to keep the IP Route Table refreshed. To disable Inverse ARP, enter the correct IP address in the Remote IP address field. Inverse ARP applies only to logical links configured for Frame Relay.* *PPP unnumbered links are supported. When used, a PPP unnumbered link will reuse the LAN IP address as the Port IP address of the PPP link and will accept any remote IP address used by the peer. To configure a PPP unnumbered link, set the Port IP address, Port IP mask and Remote IP address fields to 0.0.0.0.*
Cost: *(option field)*	Allows you to select the best path that will cause the least delay. If you have a low cost, your link speed is typically fast with a slight delay. However, if your cost is high, your speed will be slow and your delay will increase. The range is from *0* to *65535*, with a lower number indicating a smaller delay. This field is used only when the OSPF protocol is enabled. It is irrelevant for other protocols. The cost of a link in OSPF is normally calculated as 100,000,000/speed of the link in bps. For Ethernet, the resulting cost of the link would be *10*; for T1 it would be *65*. Normally, the cost is automatically calculated using the speed of the link; however, this behavior can be overridden by entering a non-0 value in this field.
Filter: *(option field)*	Assigns a packet filter to the Logical port. If filters are configured, this option brings up a list of defined filters that can be selected using the Filter Selection Menu (see Figure 5-19).
Side (NAT only): *(option field)*	For Network Address Translation, defines whether this address is displayed on the private address side (*Inside*) or on the public address side (*Outside*). The default value is *Outside*. This setting is only used when the system has NAT configured.

IP Filter Selection

The IP Filter Section allows you configure an IP Filter for a port.

Navigation:
DNX-1u Main Menu ↓ Configuration ↓ Subsystem Profile ↓ Select ROUTER ↓ **[Enter]** Subsystem Cfg ↓ Logical Port Summary ↓ Select Logical Port ↓ **<Enter>** ↓ Cursor to Filter Field ↓ **<Enter>**

Configuring an IP Filter

To configure an IP Filter, follow the procedure below.

1. From the DNX-1u Main Menu, click on **Configuration**, **Subsystem Profile**, **ROUTER** and then on **Logical Port Summary**.

   The Logical Port Summary screen is displayed.

2. Select a Logical port and press **Enter**.

   The Logical Port Summary screen is displayed.

3. Move your cursor to the *Filter* field and press **Enter**.

   The Filter Selection Menu is displayed.

Figure 5-19: *Filter Selection Menu*

```
System ID: DNX-1u No. 1                                          Help = [?]
Sycamore Networks, Inc.          DNX-1u
Filter selection menu...               Page 1 of 1

Selected filter:
Filter name          Comment
XYZ                  IP Filter

                                       Page up/down =      ['+'/'-']
                                       Erase selection =   ['e'/'E']
```

Note: *If there are no IP Filters configured, an error message is displayed. To configure filters, refer to IP Filter Configuration.*

4. This screen displays a list of all currently saved filters. To select a filter to associate with the logical port, move your cursor to the corresponding line and press **Enter**. To erase any filter from this logical port, press **E**.

CAUTION

Address filtering should be invoked with care. It is very easy to set up a filter that will prevent all traffic from passing into or through the router, and the only recovery from this situation is to connect to the craft interface and remove the filter assignment. You must have very detailed knowledge of the IP networking protocol and the traffic you are expecting in order to set up an effective filter. Refer to IP Filter Configuration for details

IP Configuration

Internet Protocol (IP), a connectionless protocol used in routing applications, defines the datagram and the method of addressing remote nodes or IP addresses as well as routing datagrams to remote hosts.

Navigation:

DNX-1u Main Menu
↓
Configuration
↓
Subsystem Profile
↓
Select ROUTER
↓
[Enter] Subsystem Cfg
↓
IP

Configuring IP Configuration Parameters

To configure IP configuration parameters, follow the procedure below.

1. From the DNX-1u Main Menu, click on **Configuration**, **Subsystem Profile**, **ROUTER** and then on **IP** or **IP and OSPF** (if the Advanced Routing feature is enabled).

   The IP Configuration menu is displayed.

Figure 5-20: *IP Configuration Menu*

```
System ID: DNX-1u No. 1                                          Help = [?]
Sycamore Networks, Inc.          DNX-1u

                                IP Configuration

                            Route Table
                            Filters
                            Secondary Address
                            Network Address Translation
                            Static Port Address Translation
                            XOT Address Translation
                            Options
```

Figure 5-21: *IP Configuration Menu - Advanced Routing Feature Enabled*

```
System ID: DNX-1u No. 1                                          Help = [?]
Sycamore Networks, Inc.          DNX-1u

                               IP Configuration


               Route Table                        OSPF Areas
               Filters                            OSPF Circuits
               Secondary Address                  OSPF Virtual Links
               Network Address Translation        OSPF Ranges
               Static Port Address Translation    Static Route Filters
               XOT Address Translation            OSPF Route Filters
               Options                            RIP Route Filters
```

2. From the IP Configuration Menu, you can configure the IP functionality and parameters. Refer to the following sections for more information.
   - IP Route Table Configuration
   - IP Filter Selection
   - Secondary Address Configuration
   - Network Address Translation Configuration
   - Static Port Address Translation Configuration
   - XOT Address Translation Configuration

   If the Advanced Routing Feature Key is enabled, the following selections are also available:

   - Options Configuration
   - OSPF Areas
   - OSPF Circuits
   - OSPF Virtual Links
   - OSPF Ranges
   - Static Route Filters
   - OSPF Route Filters
   - RIP Route Filters

IP Route Table Configuration

When IP RIP is *enabled*, the Router Subsystem automatically learns network addresses. However, you can *manually* configure addresses using the IP Route Table menu. Manually entered addresses (static addresses) are stored in FLASH memory, so they do not have to be re-discovered if there is a power failure. The aging process does not affect them.

You can also page up/down through 16 pages of addresses. Each page displays 16 static addresses. As a result, a total of up to 256 addresses can be entered.

Navigation:
DNX-1u Main Menu ↓ Configuration ↓ Subsystem Profile ↓ Select ROUTER ↓ **[Enter]** Subsystem Cfg ↓ IP ↓ Route Table

Configuring an IP Route Table

To configure a IP Route Table, follow the procedure below.

1. From the DNX-1u Main Menu, click on **Configuration**, **Subsystem Profile**, **ROUTER** and then on **IP**.

   The IP Configuration screen is displayed.

2. Select a Route Table and press **Enter**.

   The IP Route Table Configuration screen is displayed.

Figure 5-22: *IP Route Table Configuration Screen*

```
System ID: DNX-1u No. 1                                          Help = [?]
Sycamore Networks, Inc.           DNX-1u
                        IP Route Table Configuration
Dest Address        Mask                NextHop             Hops
0.0.0.0             0.0.0.0             192.168.230.1       0
0.0.0.0             0.0.0.0             0.0.0.0             0
0.0.0.0             0.0.0.0             0.0.0.0             0
0.0.0.0             0.0.0.0             0.0.0.0             0
0.0.0.0             0.0.0.0             0.0.0.0             0
0.0.0.0             0.0.0.0             0.0.0.0             0
0.0.0.0             0.0.0.0             0.0.0.0             0
0.0.0.0             0.0.0.0             0.0.0.0             0
0.0.0.0             0.0.0.0             0.0.0.0             0
0.0.0.0             0.0.0.0             0.0.0.0             0
0.0.0.0             0.0.0.0             0.0.0.0             0
0.0.0.0             0.0.0.0             0.0.0.0             0
0.0.0.0             0.0.0.0             0.0.0.0             0
0.0.0.0             0.0.0.0             0.0.0.0             0
0.0.0.0             0.0.0.0             0.0.0.0             0
0.0.0.0             0.0.0.0             0.0.0.0             0
0.0.0.0             0.0.0.0             0.0.0.0             0
                                        Page 1 of 16
                                        Page next/prev     = ['+'/'-']
                                        Entry up/down      = ['u'/'d']
                                        Entry insert/erase = ['i'/'e']
```

3. Populate this screen with specific route information. For information on these fields, refer to the following section *Field Descriptions*.
4. When complete press **X**.

   A message is displayed asking if you want to update the configuration.
5. Press **Y**.

   The route information is configured.

Field Descriptions

Table 5-7 lists the field descriptions to configure an IP Route Table.

Table 5-7: *IP Route Table Configuration Field Descriptions*

Field	Description
Destination Address: *(text field)*	Specifies a unique IP address. Each address precisely identifies the location of the data's destination. Typically, this would be the destination network number, but it can also be set to a specific host address, if specified. The address is entered in the four-field "dotted decimal notation" format specified by IP address rules.
Mask: *(text field)*	The IP mask is generated automatically; however, it can be overridden to support subnetting. The mask is represented in "dotted decimal notation."
Next Hop: *(text field)*	Specifies the IP address to which an IP frame is to be forwarded. The network portion of this address must match the network portion of the distend router. The next hop is represented in "dotted decimal notation."
Hops: *(option field)*	Indicates the number of hops required to reach the remote IP network. Static routing information overrides any dynamic routing information. The values are from *0* to *15*. ***Note:*** *If you specify a route with the destination address as 0.0.0.0 and the mask as 0.0.0.0 and the next hop as anything other than 0.0.0.0, the route will be entered into the IP Route Table as the default route. Any packets destined for a network not in the Route Table will be routed to the default route.*

IP Filter Configuration

The DNX-1u provides IP packet filtering to increase the security of the system and of the network. The filtering capability of the router allows the administrator to configure assignable filters with up to 42 "rules" per filter. The filters are then assigned to logical interfaces that need to be secured.

The filter rules use information in the IP header, such as addresses or sockets, to create a template. When an incoming packet matches the template for a rule, the DNX-1u executes the rule on that packet. Filter rules are executed in top-to-bottom order as listed in the menu; you have the ability to insert new rules above existing ones if you need to do so. At the end of the list of rules is an implicit “block everything else” rule, so that you don't accidentally create security leaks by omission. When a match occurs between a packet and a rule, it is important to remember the rule is executed (pass, block, log) and no other rule is examined for a match.

The Filter Selection Menu displays a list of all currently saved IP filters. No indication is given here as to whether or not a particular filter is actually in use. This menu is used to configure a new or saved filter or to erase a saved filter. This is also the place to set the IP address for the syslog messages that will be sent for any filters that invoke this reaction. Association of a named filter with a logical port is performed from the Logical Port Configuration Menu.

CAUTION

Address filtering should be invoked with care. It is very easy to set up a filter that will prevent all traffic from passing into or through the router, and the only recovery from this situation is to connect to the craft interface and remove the filter assignment. You must have very detailed knowledge of the IP networking protocol and the traffic you are expecting in order to set up an effective filter.

Navigation:

DNX-1u Main Menu
↓
Configuration
↓
Subsystem Profile
↓
Select ROUTER
↓
[Enter] Subsystem Cfg
↓
IP
↓
Filters

Figure 5-23: *Filter Rule Flowchart*

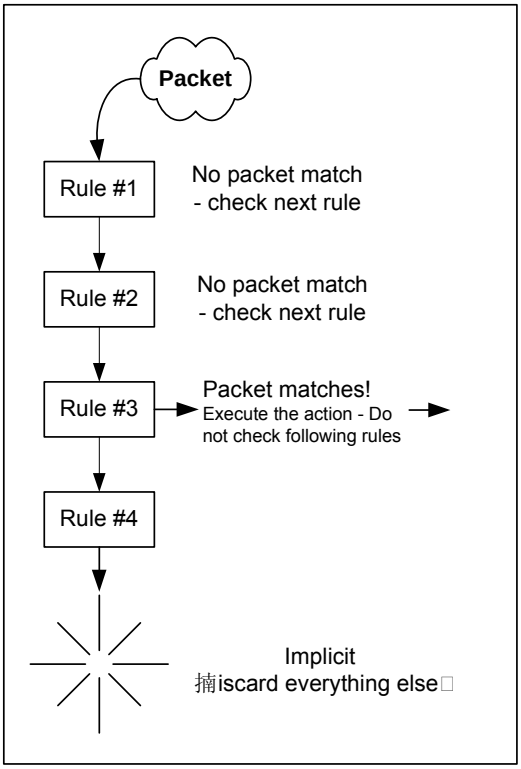

The most specific "passing" rules should be placed at the top of the filter, with the most generic rules usually being placed at the bottom. As a performance consideration, the fewer rules that are compared for each packet means lower latency of the packet through the DNX-1u; the most time-sensitive and most commonly occurring traffic should be acted upon as early as possible in the filter.

Another useful guideline, which usually provides the tightest security, is to have a short list of "pass" rules for the types of traffic that are desirable, followed by explicit or implicit "block" rules that will take care of everything else. In this case, the reason to have the explicit "block" rules included is to ensure that those violations could be logged and audited later.

Filtering Capability

The Router Subsystem's IP Filtering capability provides the ability to filter IP frames based on the following criteria:

- Reaction (*block*, *block&log*, *block&syslogd*, or *pass*)
- Direction (*in*, *out*, or *in/out*)
- Source and/or Destination IP addresses and netmasks
- Source and Destination source port comparator and port number
- Protocol field of IP frame
- Source and destination ports for User Datagram Protocol (UDP) and Transmission Control Protocol (TCP)
- Code bits for TCP

Frames that are filtered cause one of the following to occur:

- The frame is passed
- A message is logged in the local event log and frame is blocked
- The frame is blocked.

Each filter consists of up to 42 individual rules. Named filters are created and may be associated with one or more logical ports. Configuration of filters is menu-driven.

Configuring a Saved IP Filter

To configure a saved IP Filter, follow the procedure below.

1. From the DNX-1u Main Menu, click on **Configuration**, **Subsystem Profile**, **ROUTER** and then on **IP**.

   The IP Configuration screen is displayed.

2. Select a Filter and press **Enter**.

   The Filter Selection screen is displayed.

3. Move your cursor to the corresponding line and press **Enter**.

   The Single Filter Configuration Menu is displayed

Figure 5-24: *Single Filter Configuration Menu*

```
System ID: DNX-1u No. 1                                          Help = [?]
Sycamore Networks, Inc.           DNX-1u
Single filter configuration menu...     Page 1 of 3

Name:  XYZ                              Comment:  IP Filter

in/out block&log
in/out block
in/out pass from 192.168.111.111/255.255.255.1
in/out block&log









                                        Page up/down      = ['+'/'-']
                                        Rule up/down      = ['u'/'d']
                                        Rule insert/erase = ['i'/'e']
```

4. This screen displays a summary line for each rule of the filter that is being configured. The filter must be named before configuration of any rules can be performed. This screen is accessed from the IP Filter Selection Menu.
5. To insert a new rule in between two rules, press **i**. To erase a rule, move your cursor to the corresponding line and press **E**.
6. When complete press **X**.

   A message is displayed asking if you want to update the configuration.
7. Press **Y**.

   The filter information is configured.

Configuring a Single Rule

To configure a Single Rule, follow the procedure below.

1. From the Filter Selection screen, move your cursor to the corresponding line and press **Enter**.

   The Single Rule Configuration Menu is displayed.

Note: *The last line on the filter must be have a PASS rule configured in order for the filter to work properly; otherwise, all unmatched packets will be blocked.*

2. Add a Filter name and Comment. These fields are read-only, and cannot be modified from this screen. To do this you must return to the Single Filter Configuration screen to change these fields.
3. Press **Esc** to exit out of this screen and into the Single Filter Configuration screen.

4. Populate the *Filter name* and *Comment* fields.
5. When complete press **X** to save.
6. Move your cursor to the filter you just named and press **Enter**.

   The Single Rule Configuration Menu is displayed.

Figure 5-25: *Single Rule Configuration Menu*

```
System ID: DNX-1u No. 1                                          Help = [?]
Sycamore Networks, Inc.           DNX-1u
Single rule configuration menu...

Filter name................: SingleRule
Comment....................: Single Rule Configuration
Reaction...................: pass
Direction..................: in/out
Source IP address..........: 192.168.111.111
Source IP netmask..........: 255.255.255.1
Source port comparator.....:
Source port number.........: 0
Destination IP address.....: 0.0.0.0
Destination IP netmask.....: 0.0.0.0
Destination port comparator:
Destination port number....: 0
Protocol...................: 0
TCP code bits..............:
```

7. Populate this screen with specific filter information. For information on these fields, refer to the following section *Field Descriptions*.
8. When complete press **X**.

   A message is displayed asking if you want to update the configuration.
9. Press **Y**.

   The filter information is configured.
10. Once all the filter's rules are configured, navigate to the Logical Port Configuration Menu to select choose a filter to associate with the logical port.

Field Descriptions

Table 5-8 lists the field descriptions to configure a Single Rule.

Table 5-8: *Single Rule Configuration Field Descriptions*

Field	Description
Filter Name: *(text field)*	Assigns a name to a filter, up to 19 alphanumeric characters. This name also displays on the Filter Selection Menu for association with an interface.
Comment: *(text field)*	Provides additional information, up to 19 alphanumeric characters to help an equipment operator describe/recall the function or intent of the filter.
Reaction: *(option field)*	Assigns an action that a rule performs when a matching packet is found. The *pass* option forwards the packet through (without inspection by further rules), the *block* options immediately discard the packet. The *block&log* option writes an entry in the local event log indicating the rule was invoked (and *syslog* if configured) and discards the packet.
Direction: *(option field)*	Determines whether this rule will be compared to packets that are being received (*in*) or transmitted (*out*) or bi-directionally (*in/out*). Generally, the rules should be applied for received or bi-directional traffic. The default value is *in/out*. ***Note:*** *No filtering is applied to packets that originate from within the DNX-1u, such as PING and SNMP traps.*
Source IP address: *(text field)*	Combined with the Source IP Netmask, this field helps define the ORIGINATING address or range of addresses that will match this rule. Enter the IP address in “dotted decimal notation”. The valid address range is from *0.0.0.0* to *255.255.255.255*.
Source IP netmask: *(text field)*	Combined with the Source IP Address, this field helps define the ORIGINATING address or range of addresses that will match this rule. Enter the mask in “dotted decimal notation”. Valid range is from *0.0.0.0* to *255.255.255.255*.
Source port comparator: *(option field)*	To filter frames based on a comparison with the Source Port Number, the source port comparator field is used to allow the rule to cover a range of port numbers. Select **<**, **<=**, **=**, **<>**, **>**, or **>=** to filter a frame based on a comparison with the source port number entered in the following field. For example, source port >=1024.
Source port number: *(text field)*	Allows the rule to filter packets based upon a comparison with the originating port/socket field in the IP header. Ports must be entered by number. However, the system will replace some of the well-known numbers with the ASCII name for that message type, such as “Telnet” in place of 23. A full list of the standardized assigned protocol numbers is available from the IANA website at www.iana.org/assignments/protocol-numbers.
Destination IP address: *(text field)*	Combined with the Destination IP Netmask, this field helps define the RECEIVING address or range of addresses that will match this rule. Enter the IP address in “dotted decimal notation”. The valid address range is from *0.0.0.0* to *255.255.255.255*.
Destination IP netmask: *(text field)*	Combined with the Destination IP Address, this field helps define the RECEIVING address or range of addresses that will match this rule. Enter the mask in “dotted decimal notation”. The valid address range is from *0.0.0.0* to *255.255.255.255*.
Destination port comparator: *(option field)*	To filter frames based on a comparison with the Destination Port Number, the source port comparator field is used to allow the rule to cover a range of port numbers. Select **<**, **<=**, **=**, **<>**, **>**, or **>=** to filter a frame based on a comparison with the destination port number entered in the following field. For example, source port >=1024.

Table 5-8: *Single Rule Configuration Field Descriptions (Continued)*

Field	Description
Destination port number: *(text field)*	Allows the rule to filter packets based upon a comparison with the destination port/ socket field in the IP header. Ports must be entered by number. However, the system will replace some of the well-known numbers with the ASCII name for that message type, such as “Telnet” in place of 23. A full list of the standardized assigned protocol numbers is available from the IANA website at www.iana.org/assignments/protocol-numbers.
Protocol: *(text field)*	Allows the rule to filter packets based upon the layer-3 protocol identifier field in the IP header. A number is needed in this field, but the system will replace some of the well-known numbers with the ASCII name for that message type, such as “UDP” in place of 17, “TCP” in place of 6. An entry of *0* disables the protocol aspect of the filter. A full list of the standardized assigned protocol numbers is available from the IANA website at www.iana.org/assignments/protocol-numbers.
TCP code bits: *(option field)*	To further filter frames based on TCP code bits, toggle the *TCP code bits* option. This option allows the rule to focus upon certain applications or messages that occur within the TCP protocol, without affecting other applications and/or messages using TCP. For example, to prevent all incoming TCP connections, set *Protocol* to *6* (for TCP), set *TCP code bits* option to *SYN* and *Direction* to *In*. The choices are: • *URG*: Urgent pointer field is valid. • *SYN*: Synchronize sequence numbers. • *FIN*: Sender has reached the end of its byte stream. • *RST*: Reset this connection. • *PSH*: This segment requires a push. • *ACK*: Acknowledgement field is valid.

Adding a Filter

To add a filter, follow the procedure below.

1. From the Filter Selection Menu, press **A** or move your cursor to an empty line and press **Enter**.

   The Single Filter Configuration Screen is displayed

2. Populate this screen with specific filter information. For information on these fields, refer to the previous section *Field Descriptions*.
3. When complete press **X**.

   A message is displayed asking if you want to update the configuration.

4. Press **Y**.

   The filter information is added.

Modifying a Filter

To modify a filter, follow the procedure below.

1. From the Filter Selection Menu, press **A** or move your cursor to an empty line and press **Enter**.

   The Single Filter Configuration Screen is displayed

2. Move your cursor to the corresponding line and press **E**.
3. Modify the selected field(s). For information on these fields, refer to the previous section *Field Descriptions*.
4. When complete press **X**.

   A message is displayed asking if you want to update the configuration.

5. Press **Y**.

   The filter information is modified.

Removing a Filter

To remove a filter, follow the procedure below.

1. From the Filter Selection Menu, select the filter you want to remove and press **E**.

   A message is displayed asking if you want to remove this filter.

   The Single Filter Configuration Screen is displayed

2. Press **Y**.

   The filter information is deleted.

Setting the IP Address for Syslog Messages

This procedure will set the IP address for Syslog messages, which will be sent for filters. To set the IP address for Syslog messages, follow the procedure below.

1. From the DNX-1u Main Menu, click on **Events** and then on **Event Configuration**.

   The Event Configuration Menu is displayed.
2. Move your cursor to the *Syslog server IP address* field and press **Enter**.
3. Enter the IP address of the Syslog server and press **Enter**.
4. When complete press **X**.

   A message is displayed asking if you want to update the configuration.
5. Press **Y**.

   The IP address information is set.

IP Filter Assigned Numbers Quick Reference

The lists below show commonly used protocol and port numbers as listed in Internet RFC 1700. This list is just a sample. For more information, refer to RFC 1700 as a master reference.

Commonly Used Protocol Numbers
1 ICMP
2 IGMP
6 TCP
17 UDP

Commonly Used Port Numbers
20 FTP-data
21 FTP
23 Telnet
25 SMTP
53 Domain Name Service
69 TFTP
80 HTTP
110 POP3
161 SNMP
520 RIP

Secondary Address Configuration

The DNX-1u Router Subsystem is usually configured as one IP address on a particular network. It is also capable of being configured with multiple IP addresses (up to 120) in order to be able to sit on two or more different networks (multiple homing). The IP Secondary Address Configuration Menu allows you to set up this multiple homing capability for LAN, WAN 1, etc.

Navigation:
DNX-1u Main Menu ↓ Configuration ↓ Subsystem Profile ↓ Select ROUTER ↓ **[Enter]** Subsystem Cfg ↓ IP ↓ Secondary Address

Configuring a Secondary Address

To configure a Secondary Address, follow the procedure below.

1. From the DNX-1u Main Menu, click on **Configuration**, **Subsystem Profile**, **ROUTER** and then on **IP**.

   The IP Configuration screen is displayed.

2. Select *Secondary Address* and press **Enter**.

   The IP Secondary Address Configuration screen is displayed.

Figure 5-26: *IP Secondary Address Configuration Screen*

```
System ID: DNX-1u No. 1                                          Help = [?]
Sycamore Networks, Inc.           DNX-1u
                      IP Secondary Address Configuration

Port      DLCI      IP Address          Mask
LAN       0         0.0.0.0             0.0.0.0
LAN       0         0.0.0.0             0.0.0.0
LAN       0         0.0.0.0             0.0.0.0
LAN       0         0.0.0.0             0.0.0.0
LAN       0         0.0.0.0             0.0.0.0
LAN       0         0.0.0.0             0.0.0.0
LAN       0         0.0.0.0             0.0.0.0
LAN       0         0.0.0.0             0.0.0.0
LAN       0         0.0.0.0             0.0.0.0
LAN       0         0.0.0.0             0.0.0.0
LAN       0         0.0.0.0             0.0.0.0
LAN       0         0.0.0.0             0.0.0.0
LAN       0         0.0.0.0             0.0.0.0
LAN       0         0.0.0.0             0.0.0.0
LAN       0         0.0.0.0             0.0.0.0
                                        Page 1 of 8
                                        Page next/prev     = ['+'/'-']
                                        Entry up/down      = ['u'/'d']
                                        Entry insert/erase = ['i'/'e']
```

3. Press **Space** or **Backspace** to move between IP fields. Place your cursor on the specified field, press **Enter**.

   The IP Secondary Address Configuration Entry Menu is displayed.

Figure 5-27: *IP Secondary Address Configuration Entry Menu*

```
System ID: DNX-1u No. 1                                          Help = [?]
Sycamore Networks, Inc.           DNX-1u
                      IP Secondary Address Configuration





          Port.......................: LAN
          DLCI (0 if not applicable)..: 0
          IP Address.................: 0.0.0.0
          Mask.......................: 0.0.0.0
```

Note: *Additional steps may be required in order to utilize multiple homing in a router-to-router configuration. See the following page for an example and special instructions.*

4. Modify the selected field(s). For information on these fields, refer to the following section *Field Descriptions*.
5. When complete press **X**.

   A message is displayed asking if you want to update the configuration.
6. Press **Y**.

   The secondary address information is configured.

Field Descriptions

Table 5-9 lists the field descriptions to configure a Secondary Address.

Table 5-9: *IP Secondary Address Field Descriptions*

Field	Description
Port: *(option field)*	Identifies the interface (port) on which frames destined for a particular address are transmitted.
DLCI (Data Link Control Identifier): *(text field)*	Specifies the DLCI to be used if Frame Relay is enabled and multi-homing is being assigned to a logical WAN port.
IP Address: *(text field)*	Indicates the secondary address for the Router should be entered in this field in “dotted decimal notation.”
Mask: *(display field)*	Displays the automatically generated mask. It can be overridden to support subnetting. The mask is represented in “dotted decimal notation.”

Special Instructions for Router-to-Router Configuration

There are instances that may occur where the DNX-1u unit is utilized in a router-to-router configuration with one or more additional DNX-1u units on a different network. In some of these cases, an additional configuration procedure must be followed in order to take full advantage of DNX-1u's multiple homing capability. An example of this is shown in Figure 5-28 below:

Figure 5-28: *Sample Router-to-Router Configuration with Multiple Homing*

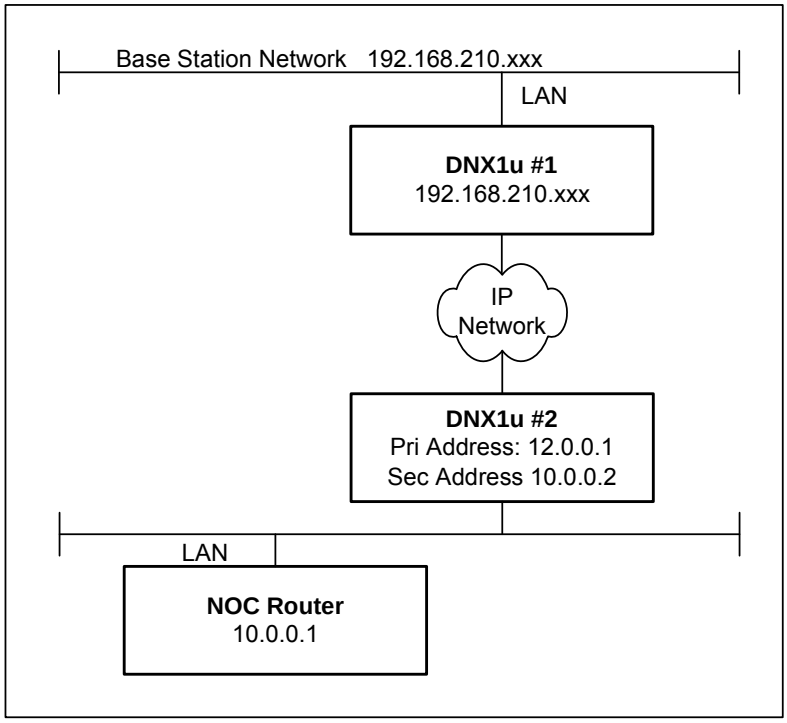

In the figure above, DNX-1u #2 can ping (communicate with) the NOC Router's LAN address because DNX-1u #2 is configured with two addresses (multiple homing). However, in order for NOC Router to communicate with DNX-1u #1, you must configure a static route in the IP Route Table within DNX-1u #2, as shown in the IP Route Table Configuration section. For this particular example, you would configure the Destination Address as 12.0.0.1, and the Next Hop as 10.0.0.2.

Network Address Translation Configuration

Network Address Translation (NAT) is a method for translating private internal IP addresses into globally assigned IP addresses when accessing the public network. It permits unlimited number of inside or private node addresses to access the Internet by translating these private addresses into global addresses. It also serves as a firewall by keeping individual inside IP addresses hidden from the outside world. NAT is configured by defining address pools and specifying whether a port is “Inside” or “Outside”. The NAT Configuration Menu displays 36 entries in a read-only format. Selecting any *1st Local Address* field will display the NAT Entry Menu, where the individual IP addresses can be input.

Navigation:
DNX-1u Main Menu ↓ Configuration ↓ Subsystem Profile ↓ Select ROUTER ↓ **[Enter]** Subsystem Cfg ↓ IP ↓ Network Address Translation

Configuring Network Address Translations

To configure Network Address Translations, follow the procedure below.

1. From the DNX-1u Main Menu, click on **Configuration**, **Subsystem Profile**, **ROUTER** and then on **IP**.

   The IP Configuration screen is displayed.

2. Select *Network Address Translation* and press **Enter**.

   The Network Address Translation Configuration screen is displayed.

Figure 5-29: *Network Address Translation Configuration Screen*

```
System ID: DNX-1u No. 1                                          Help = [?]
Sycamore Networks, Inc.          DNX-1u
                   Network Address Translation Configuration
Default timeout (in seconds)...:86400
UDP timeout (in seconds).......:300
DNS timeout (in seconds).......:60
TCP timeout (in seconds).......:86400
FINRST timeout (in seconds)....:60
1st Local Address        1st Local Address        1st Local Address
0.0.0.0                  0.0.0.0                  0.0.0.0
0.0.0.0                  0.0.0.0                  0.0.0.0
0.0.0.0                  0.0.0.0                  0.0.0.0
0.0.0.0                  0.0.0.0                  0.0.0.0
0.0.0.0                  0.0.0.0                  0.0.0.0
0.0.0.0                  0.0.0.0                  0.0.0.0
0.0.0.0                  0.0.0.0                  0.0.0.0
0.0.0.0                  0.0.0.0                  0.0.0.0
0.0.0.0                  0.0.0.0                  0.0.0.0
0.0.0.0                  0.0.0.0                  0.0.0.0
0.0.0.0                  0.0.0.0                  0.0.0.0
0.0.0.0                  0.0.0.0                  0.0.0.0
```

3. Modify the selected field(s). For information on these fields, refer to the following section *Field Descriptions*.
4. When complete press **X**.

   A message is displayed asking if you want to update the configuration.
5. Press **Y**.

   The Network Address Translation information is configured.

Field Descriptions

Table 5-10 lists the field descriptions to configure Network Address Translations.

Table 5-10: *Network Address Translation Configuration Field Descriptions*

Field	Description
Default time-out: *(text field)*	Specifies the number of seconds that an address entry is valid before an idle timeout occurs when utilizing “dynamic” type. When the idle timeout occurs, the address is free for another user. The default setting is *86400* seconds (24 hours).
UDP timeout: *(text field)*	Specifies the UDP timeout when using the “overloaded” address translation (where there are more private addresses than public addresses). This setting adjusts the number of seconds that will be allowed to elapse before a UDP-based session is torn down. The default setting is *300* seconds.

Table 5-10: *Network Address Translation Configuration Field Descriptions*

Field	Description
DNS timeout: *(text field)*	Specifies the DNS timeout when using the “overloaded” address translation (where there are more private addresses than public addresses). This setting adjusts the number of seconds that will be allowed to elapse before a DNS-based session is torn down. The default setting is *60* seconds. Sessions that use DNS are generally much shorter than this default value.
TCP timeout: *(text field)*	Specifies the TCP timeout when using the “overloaded” address translation (where there are more private addresses than public addresses). This setting adjusts the number of seconds that will be allowed to elapse before a TCP-based session is torn down. The default setting is *86400* seconds (24 hours).
FINRST timeout: *(text field)*	Used to address TCP implementation problems as per RFC-1122 and RFC-2525. FINRST refers to two control bits that reside in the 14th octet of the TCP header. FIN=Finished (no more data from sender), and RST=Reset (Reset the connection from receiver). The timeout setting for FINRST prevents “hung” TCP connection if a RST acknowledgement to a FIN is not received before the timeout period ends. When using “overloaded” address translation (where there are more private addresses than public addresses), this setting adjusts the number of seconds that are allowed to elapse without the RST acknowledgement before the session will be torn down. The default setting is *60* seconds.
1st Local Address: *(display field)*	Displays the first local (private) IP address in the pool. Selecting this field brings up the Network Address Translation Entry Menu.

Configuring a Network Address Translation Entry

To configure Network Address Translation entry, follow the procedure below.

1. From the Network Address Translation Configuration screen, move your cursor to the *First Local Address* field and press **Enter**.

   The Network Address Translation Entry screen is displayed.

Figure 5-30: *Network Address Translation Entry Screen*

```
System ID: DNX-1u No. 1                                          Help = [?]
Sycamore Networks, Inc.           DNX-1u
                       Network Address Translation Entry



First Local Address.: 0.0.0.0
Last Local Address..: 0.0.0.0
Local Mask..........: 0.0.0.0
First Global Address: 0.0.0.0
Last Global Address.: 0.0.0.0
Global Mask.........: 0.0.0.0
Type................: Static
```

2. Modify the selected field(s). For information on these fields, refer to the following section *Field Descriptions*.
3. After a NAT entry is configured, press **X** to exit the screen.

   A message is displayed asking if you want to update the configuration.
4. Press **Y**.

   The first local address for that entry will display as an identifier for the entry on the Configure Network Translation screen.

Field Descriptions

Table 5-11 lists the field descriptions to configure a Network Address Translation entry.

Table 5-11: *Network Address Translation Configuration Entry Field Descriptions*

Field	Description
First Local Address: *(text field)*	Assigns the first local (private) IP address in the pool in "dotted decimal notation". Valid entries range from *1.1.1.1* to *254.254.254.254*.
Last Local Address: *(text field)*	Assigns the last local IP address for the NAT pool. Valid entries range from *1.1.1.1* to *254.254.254.254*. This value must be equal to or larger than the First Local Address setting. If there is only one address in the pool, set this value equal to the First Local Address setting.
Local Mask: *(text field)*	Assigns the IP protocol network mask for the Local/private address pool. Valid entries range from *0.0.0.0* to *255.255.255.255*. If there is only one address in the Local Address pool, set this value to *255.255.255.255*.
First Global Address: *(text field)*	Assigns the first Global/public IP address for the NAT pool. Valid entries range from *1.1.1.1* to *254.254.254.254*.
Last Global Address: *(text field)*	Assigns the first IP address for the NAT pool. Valid entries range from *1.1.1.1* to 2*54.254.254.254*. This value must be equal to or larger than the First Global Address setting. If an Overloaded configuration is being used, set this value equal to the First Global Address setting.
Global Mask: *(text field)*	Assigns the IP protocol network mask for the Global/public address pool. Valid entries range from *0.0.0.0* to *255.255.255.255*. If there is only one address in the Global Address pool (Overloaded configuration), set this value to *255.255.255.255*.
Type: *(option field)*	Specifies the NAT type. The choices are: • *Static* - These entries are permanent and have a configured local to global mapping relationship (the number of local addresses must equal the number of global addresses). If more than one address is defined in the pool, then the first local is mapped to the first global address, the next local address is mapped to the next global address, and so on. This is best used on networks where all local nodes are equally active and network utilization is relatively high, because it offers the best latency and forwarding performance. Static entries do not time out. • *Dynamic* - These pools have the local to global mapping done on-demand. Mappings created from a dynamic pool time out, if idle for more than the configured timeout value. • *Overloaded* - Configures all local addresses to be mapped to a single global address. This works best on networks with low utilization. Mappings created from an overloaded configuration will be timed out, if traffic is sustained for more than the configured timeout values for each traffic type.

Modifying a NAT Entry

To modify Network Address Translation entry, follow the procedure below.

1. From the Network Address Translation Entry screen, move your cursor to the field(s) you want to modify and press **Enter**.
2. Modify the selected field(s). For information on these fields, refer to the following section *Field Descriptions*.
3. After a NAT entry is configured, press **X** to exit the screen.

   A message is displayed asking if you want to update the configuration.
4. Press **Y**.

   The Network Address Translation information is modified.

Deleting a NAT Entry

To delete Network Address Translation entry, follow the procedure below.

From the Network Address Translation Entry screen, set the *First Local Address* field to **0.0.0.0**.

5. Press **X** to exit the screen.

   A message is displayed asking if you want to update the configuration.
6. Press **Y**.

   The Network Address Translation information is deleted.

Static Port Address Translation Configuration

Static Port Address Translation is designed to allow one-to-one mapping between local and global addresses. A common use for Static Port Address Translation is to allow Internet users from the public network to access a Web server located in the private network.

Navigation:
DNX-1u Main Menu ↓ Configuration ↓ Subsystem Profile ↓ Select ROUTER ↓ **[Enter]** Subsystem Cfg ↓ IP ↓ Static Port Address Translation

Configuring Static Port Address Translation

To configure a Static Port Address Translation, follow the procedure below.

1. From the DNX-1u Main Menu, click on **Configuration**, **Subsystem Profile**, **ROUTER** and then on **IP**.

   The IP Configuration screen is displayed.

2. Select *Static Port Address Translation* and press **Enter**.

   The Static Port Address Translation Configuration screen is displayed.

Figure 5-31: *Static Port Address Translation Configuration Screen*

```
System ID: DNX-1u No. 1                                          Help = [?]
Sycamore Networks, Inc.           DNX-1u
                 Static Port Address Translation Configuration

Global Address    Global Port    Local Address     Local Port     Protocol
0.0.0.0           0              0.0.0.0           0
0.0.0.0           0              0.0.0.0           0
0.0.0.0           0              0.0.0.0           0
0.0.0.0           0              0.0.0.0           0
0.0.0.0           0              0.0.0.0           0
0.0.0.0           0              0.0.0.0           0
0.0.0.0           0              0.0.0.0           0
0.0.0.0           0              0.0.0.0           0
0.0.0.0           0              0.0.0.0           0
0.0.0.0           0              0.0.0.0           0
0.0.0.0           0              0.0.0.0           0
0.0.0.0           0              0.0.0.0           0
0.0.0.0           0              0.0.0.0           0
0.0.0.0           0              0.0.0.0           0
0.0.0.0           0              0.0.0.0           0
0.0.0.0           0              0.0.0.0           0
0.0.0.0           0              0.0.0.0           0
```

3. Move your cursor to the *Global Address* field, and press **Enter**. The Static Port Address Translation Entry screen is displayed.

Figure 5-32: *Static Port Address Translation Entry Screen*

```
System ID: DNX-1u No. 1                                          Help = [?]
Sycamore Networks, Inc.           DNX-1u
                     Static Port Address Translation Entry





Global Address....:0.0.0.0
Global Port.......:0
Local Address.....:0.0.0.0
Local Port........:0
Protocol..........:
```

4. Modify the selected field(s). For information on these fields, refer to the following section *Field Descriptions*.
5. After a Static Port Address Translation is configured, press **X** to exit the screen.

   A message is displayed asking if you want to update the configuration.
6. Press **Y**.

   The global address for that entry is displayed as an identifier for the entry on the Static Port Address Translation Configuration screen.

Field Descriptions

Table 5-12 lists the field descriptions to configure a Static Port Address Translation entry.

Table 5-12: *Static Port Address Translation Configuration Entry Field Descriptions*

Field	Description
Global Address: *(text field)*	Specifies the global address in “dotted decimal notation.” The global address is the IP address assigned to a host on the outside network by the host's owner.
Global Port: *(text field)*	Specifies the global port associated with the global address.
Local Address: *(text field)*	Specifies the local address in “dotted decimal notation.” The local address is the IP address on the inside network, which may be private/hidden from outside of the internal network.
Local Port: *(text field)*	Indicates the local port associated with the Local Address.
Protocol: *(option field)*	Specifies the protocol to use in Static Port Address Translation. The choices are: • *TCP* (Transmission Control Protocol) - The TCP part of TCP/IP. TCP and UDP (User Datagram Protocol) are the two transport protocols in TCP/IP. TCP ensures that a message is sent accurately and in its entirety. However, for real-time voice and video, there is really no time or reason to correct errors, and UDP is used instead. • *UDP* (User Datagram Protocol) - A protocol within the TCP/IP protocol suite that is used in place of TCP when a reliable delivery is not required. There is less processing of UDP packets than there is for TCP. UDP is widely used for real-time audio and video traffic where lost packets are simply ignored, because there is no time to retransmit. If UDP is used and a reliable delivery is required, packet sequence checking and error notification must be written into the applications. Unlike TCP, which requires an acknowledgment at the receiving end (handshaking) before the session can begin, UDP just sends out packets in a one-way transmission. • *ICMP* (Internet Control Message Protocol) A TCP/IP protocol used to send error and control messages. For example, a router uses ICMP to notify the sender that its destination node is not available. A ping utility sends ICMP echo requests to verify the existence of an IP address.

XOT Address Translation Configuration

Address translation between X.121 and IP is done statically based on the user-defined addressing relationships shown in the XOT Address Translation Configuration Display.

Navigation:
DNX-1u Main Menu ↓ Configuration ↓ Subsystem Profile ↓ Select ROUTER ↓ **[Enter]** Subsystem Cfg ↓ IP ↓ XOT Address Translation

Special Instructions for X.25 Over TCP/IP (XOT) Configuration

This section describes the XOT tunneling operation, provides an example of XOT configuration using XOT over LAPB, and describes the screens and fields used for configuring the XOT.

XOT must be enabled using the Basic Routing Key feature. If the Basic Routing Key feature is disabled, XOT and LAPB are still operational. Calls will continue to go through the DNX-1u to the Cisco® 7200. For additional information, refer to Section 10, "About"

XOT Operation

The XOT feature allows tunneling of X.25 packets over a TCP/IP network using a virtual channel approach. Each X.25 virtual channel has its own TCP connection. All XOT/TCP connections are made to port 1998. The Layer 2 protocol (LAPB) is terminated at the interface supporting XOT and all the Layer 3 X.25 packets are passed through a TCP connection to the remote end. At the remote end, the packets are passed to the X.25 device through the local Layer 2 instance.

If an X.25 device needs to make a connection over XOT, it sends a Call Request packet over Layer 2 on the interface connected to the router. The router terminates Layer 2 and passes the Call Request to the XOT process. The XOT Subsystem examines the remote X.121 address in the Call Request packet and finds the corresponding IP address of the remote XOT interface in the local XOT routing table. XOT then establishes a TCP connection to the selected IP address on port 1998.

After the TCP connection is established, the XOT header is added to the packet and the packet is forwarded over the TCP connection to the remote XOT process. At the remote end, the XOT header is removed from the received Call Request packet and an available Local Channel Number (LCN) is selected. The XOT process then replaces the LCN received on the Call Request packet with the new LCN. The packet is then passed to Layer 2 for transmission to the remote X.25 device.

Once the call is established, all X.25 packets (except those of local significance per RFC 1613 Section 6.4) are passed end-to-end over the TCP connection, with XOT header insertion and removal, and LCN replacement performed as described above. End-to-end flow control, which is standard in the industry, requires that all packets are passed over the TCP connection with the two attached X.25 devices performing flow control as necessary. Upon receipt of a Call Clear packet the TCP connection will be terminated.

The XOT feature also provides the flexibility to allocate LCNs to locally attached X.25 devices on a per HSSD port basis, starting with LCN 1. There can be one to 32 LCNs allocated per HSSD port.

Note: *The DNX-1u supports a maximum of 11 uni-directional XOT calls or up to 5 bi-directional calls plus one additional uni-directional call.*

Figure 5-33: *XOT Configuration*

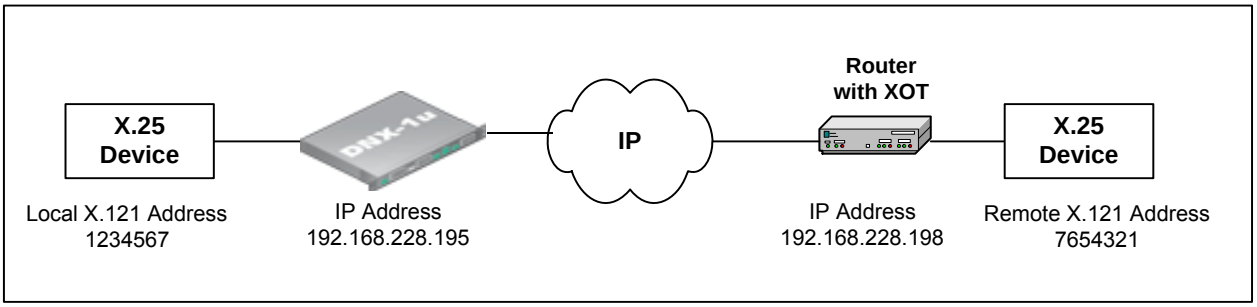

Configuring XOT Address Translations

To configure XOT Address Translations, follow the procedure below.

1. From the DNX-1u Main Menu, click on **Configuration**, **Subsystem Profile**, **ROUTER** and then on **IP**.

   The IP Configuration screen is displayed.

2. Select *XOT Address Translation* and press **Enter**.

   The XOT Address Translation Configuration screen is displayed.

Figure 5-34: *XOT Address Translation Configuration Screen*

```
System ID:                                                          Help = [?]
Sycamore Networks, Inc.           DNX-1u
                          XOT Address Translation Configuration
Name          WAN  Local X.121       Remote X.121    Remote IP Addr
XOT           2    1234567           7654321         192.168.228.198
              NA   0                 0               0.0.0.0
              NA   0                 0               0.0.0.0
              NA   0                 0               0.0.0.0
              NA   0                 0               0.0.0.0
              NA   0                 0               0.0.0.0
              NA   0                 0               0.0.0.0
              NA   0                 0               0.0.0.0
              NA   0                 0               0.0.0.0
              NA   0                 0               0.0.0.0
              NA   0                 0               0.0.0.0
              NA   0                 0               0.0.0.0
              NA   0                 0               0.0.0.0
              NA   0                 0               0.0.0.0
              NA   0                 0               0.0.0.0
              NA   0                 0               0.0.0.0
              NA   0                 0               0.0.0.0
              NA   0                 0               0.0.0.0
              NA   0                 0               0.0.0.0
              NA   0                 0               0.0.0.0
```

3. Modify the selected field(s). For information on these fields, refer to the following section *Field Descriptions*.

4. After a XOT Address Translation is configured, press **X** to exit the screen.

   A message is displayed asking if you want to update the configuration.

5. Press **Y**.

   The XOT Address Translation is configured.

Configuring an XOT Address Translations Entry

To configure a XOT Address Translation entry, follow the procedure below.

1. From the XOT Address Translation Configuration screen, move your cursor to the *Name* field and press **Enter**.

   The XOT Address Translation Configuration Entry screen is displayed.

Figure 5-35: *XOT Address Translation Configuration Entry Menu*

```
System ID:                                                          Help = [?]
Sycamore Networks, Inc.           DNX-1u
                      XOT Address Translation Configuration

Name.....................: XOT
Local WAN Virtual Port...: 2
Local X.121 Address......: 1234567
Remote X.121 Address.....: 7654321
Remote IP Address........: 192.168.228.198
```

2. Modify the selected field(s). For information on these fields, refer to the following section *Field Descriptions*.
3. After a XOT Address Translation entry is configured, press **X** to exit the screen.

   A message is displayed asking if you want to update the configuration.
4. Press **Y**.

   The XOT Address Translation entry is configured.

Field Descriptions

Table 5-13 lists the field descriptions to configure a XOT Address Translation entry.

Table 5-13: *XOT Address Translation Configuration Entry Field Descriptions*

Field	Description
Name: *(text field)*	Specifies the name of the X.25 over TCP/IP (XOT) for a particular configuration, up to 9 alphanumeric characters.
Local WAN Virtual Port: *(option field)*	Specifies the local WAN virtual port for a particular configuration running XOT over LAPB. The values are from *1* to *14*.
Local X.121 Address: *(text field)*	Specifies the local X.121 conforming address for a particular configuration, up to 14 alphanumeric characters. This is the calling address in the incoming X.25 call request initiated from the X.25 device connected to the DNX-1u, and the called address in the incoming X.25 call from the TCP/IP network. This field can also have a address of zero characters in length to accommodate the X.25 UFEP, which is capable of generating calls with a calling address length of 0. ***Note:*** *X.121 addresses are sometimes called IDNs (International Data Numbers).*
Remote X.121 Address: *(text field)*	Specifies the remote X.121 conforming address for a particular configuration., up to 14 alphanumeric characters. This is the calling address in the incoming X.25 call from the TCP/IP network, and the called address in the incoming X.25 call request initiated from the X.25 device connected to the DNX-1u. This field can also have a address of zero characters in length to accommodate the X.25 UFEP, which is capable of generating calls with a calling address length of 0. ***Note:*** *X.121 addresses are sometimes called IDNs (International Data Numbers).*
Remote IP Address: *(text field)*	Indicates the IP address of the XOT capable device that exchanges XOT packets with DNX-1u over the TCP/IP network. Enter a particular configuration's IP address in "dotted decimal notation." Valid range is from *1.1.1.1* to *254.254.254.254*.

Local Channel Number (LCN) Allocation

The XOT Subsystem transparently allocates LCNs to locally attached X.25 devices on a per HSSD port basis, starting with LCN 1. LCN allocation is a lower-level XOT Subsystem process that does not require any configuration by the user. There can be one to 32 LCNs allocated per HSSD port.

Note: *The DNX-1u supports a maximum of 11 uni-directional XOT calls or up to 5 bi-directional calls plus one additional uni-directional call.*

Using Wildcards for X.121 Local and Remote Addresses

Wildcards can be used with X.121 local and remote addresses. Wildcards are recognized by the system when the characters "**" are entered as the last one or two characters in each address. The last character must be wildcarded if two characters are wildcarded.

For example:

- Valid wildcard entries are **zero length** or **123456789123****
- Invalid wildcard entries are: **123456789123*4** or **********

The use of wildcards involves the following constraints:

- Maximum calling address of 14 alphanumeric characters
- Only the last two characters of the calling address can have wildcards
- Zero length calling addresses and wildcard addresses are mutually exclusive on a per-call basis
- Only the status of active calls is displayed
- Only the first 20 active calls are displayed from the embedded menu or using SNMP

Note: *The current system capacity is 11 calls.*

- XOT status is read-only when obtained using SNMP
- A remote X.121 address cannot be configured in the XOT table with wildcards if the calling side does not provide a calling X.121 address. In the example below, the following configuration is not valid if the remote XOT equipment will not provide a caller's X.121 address in the packets that reach the DNX-1u.

  Example:

Name	WAN	Local X.121	Remote X.121	Report ID Addr
Philly	7	2001	100*	172.16.96.93

- A maximum of *two* wildcards can be used.

Note: *Configuring more than two wildcards at one time can have a noticeable effect on system performance and menu/SNMP response time.*

Figure 5-36: *Sample Wildcard Configuration for X.121 Local and Remote Addresses*

```
System ID: DNX-1u No. 1                                          Help = [?]
Sycamore Networks, Inc.           DNX-1u
                     XOT Address Translation Configuration

Name....................: XOT
Local X.121 Address......: 12345**
Remote X.121 Address.....: 7654321
IP Address...............: 192.168.228.198
Virtual Port.............: 2
```

Example of XOT Configuration Using XOT Over LAPB

XOT connections can be configured over any DNX-1u WAN interface, such as a PPP connection over T1/E1, over Ethernet, or over a serial interface using LAPB. This section provides an example of how to configure the DNX-1u to interface with an end-point DTE device running at 8 or 16 kbps using XOT over LAPB protocol. The DNX-1u should have IP connectivity to an XOT-capable device that exchanges XOT packets with the DNX-1u over a TCP/IP network. Figure 5-37 illustrates this configuration.

1. Enable and configure one of the HSSD Sync ports for either the RS-232 Transport Mode or V.35 Transport Mode. Be sure the end-point device is using the same Transport Mode. Refer to "High-Speed Synchronous Data Subsystem" on page 5-117 for details.

2. Configure a WAN interface for XOT over LAPB at 8 kbps or 16 kbps. Be sure the end-point device is using the same speed (either 8 kbps or 16 kbps). To do this, invoke the WAN Virtual Port Configuration menus (Figure 5-12, Figure 5-13, and Figure 5-14). These steps are detailed in "WAN Configuration" on page 5-23.

3. Map the Router WAN to the configured HSSD Sync port. Refer to Section 6, "Connection Maps" for details on configuring a map connection.

4. Initialize the other end-point device to ensure the other device is communicating with the DNX-1u over the LAPB link.

5. Using the Logical Port Status Menu, verify the XOT over LAPB is active. Refer to "Viewing Logical Port Status" on page 7-44 for details on checking the status.

Figure 5-37: Sample XOT Configuration over LAPB

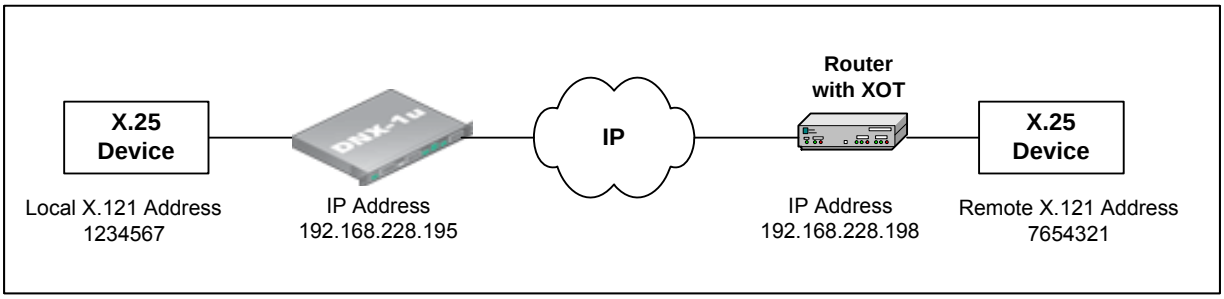

Options Configuration

The Options Menu allows you to enable or disable three protocol options for the Router Subsystem.

Navigation:
DNX-1u Main Menu ↓ Configuration ↓ Subsystem Profile ↓ Select ROUTER ↓ **[Enter]** Subsystem Cfg ↓ IP ↓ Options

Configuring Options

To configure options for the Router, follow the procedure below.

1. From the DNX-1u Main Menu, click on **Configuration**, **Subsystem Profile**, **ROUTER** and then on **IP**.

   The IP Configuration screen is displayed.

2. Select *Options* and press **Enter**.

   The Options screen is displayed.

Figure 5-38: *Options Menu*

```
System ID: DNX-1u No. 1                                          Help = [?]
Sycamore Networks, Inc.          DNX-1u
                                 Options

Proxy Arp......: Off
RIP 2..........: Off
RIP 2 Multicast: Off
```

3. Modify the selected field(s). For information on these fields, refer to the following section *Field Descriptions*.
4. After routing option(s) are configured, press **X** to exit the screen.

   A message is displayed asking if you want to update the configuration.
5. Press **Y**.

   The selected option(s) are configured.

Field Descriptions

Table 5-14 lists the field descriptions to configure a IP options.

Table 5-14: *Options Menu Field Descriptions*

Field	Description
Proxy Arp: *(option field)*	Allows the Router to answer ARP requests intended for another destination on the network by "faking" its identity. The Router accepts responsibility for routing packets to the "real" destination. Proxy ARP can help equipment on a subnet reach remote subnets without configuring routing or a default gateway. This field is used to turn Proxy ARP *On* or *Off*. The default is *Off*.
RIP 2: *(option field)*	An extension of Routing Information Protocol (RIP) that enables RIP messages to carry more information, which in turn permits the use of a simple authentication mechanism to secure table updates. RIP 2 also supports subnet masks, a critical feature that was not available in RIP. This field is used to turn RIP 2 *On* or *Off*. The default is *Off*.
RIP 2 Multicast: *(option field)*	When this field is set to *On*, RIP 2 packets are multicast instead of being broadcast. Multicast can deliver source traffic to multiple receivers without adding any additional burden on the source. Multicast sends messages to specific groups of addresses, whereas broadcast sends to every address on the network. The default setting is *Off*.

OSPF Area Configuration

Open Shortest Path First (OSPF) is designed to run on Broadcast networks, such as Ethernet, PPP, PPP-MLP and Non-Broadcast Multiple Access (NBMA) networks. The DNX-1u supports both Intra-Area and Inter-Area routing, which includes up to *three* areas including any combination of:

- Normal Areas (maximum of three)
- Stub Areas (maximum of two)
- Not So Stubby Areas (s) (maximum of two)

Note: *Stub Areas represent "dead ends" in the network and are specifically configured so that all routers within the area reflect the same hop cost. This is beneficial because any connected routers will require less memory and generally create less routing overhead.*

Note: *To utilize OSPF, the Advanced Routing Option Feature Key must be enabled.*

Navigation:
DNX-1u Main Menu ↓ Configuration ↓ Subsystem Profile ↓ Select ROUTER ↓ IP and OSPF ↓ OSPF Areas

Additional OSPF parameters can be configured from the Logical Port LAN Configuration Menu and the Logical Port WAN Configuration Menu. For more information, refer to Logical Port Configuration and WAN Configuration.

Configuring OSPF Areas

To configure an OSPF Area, follow the procedure below.

1. From the DNX-1u Main Menu, click on **Configuration**, **Subsystem Profile**, **ROUTER** and then on **IP and OSPF**.

   The IP Configuration screen is displayed.

2. Select **OSPF Areas** and press **Enter**.

   The OSPF Areas Configuration Menu is displayed.

Figure 5-39: *OSPF Areas Configuration Menu*

```
System ID: DNX-1u No. 1                                          Help = [?]
Sycamore Networks, Inc.           DNX-1u

OSPF Areas Configuration Menu:
Area ID             Area Type           Stub Metric
0.0.0.0             Normal              0
0.0.0.0             Normal              0
0.0.0.0             Normal              0









                                        Page next/prev     = ['+'/'-']
                                        Entry up/down      = ['u'/'d']
                                        Entry insert/erase = ['i'/'e']
```

3. Select the OSPF Area to be modified.

   The OSPF Area Configuration Menu is displayed.

Figure 5-40: *OSPF Area Configuration Menu*

```
System ID: DNX-1u No. 1                                          Help = [?]
Sycamore Networks, Inc.               DNX-1u
                                    Options

OSPF Area Configuration Menu:

Area ID ..........: 0.0.0.0
Area Type ........: Normal
Stub Metric ......: 0
```

4. Modify the selected field(s). For information on these fields, refer to the following section *Field Descriptions*.

5. When complete, press **X** to exit the screen.

   A message is displayed asking if you want to update the configuration.

6. Press **Y**.

   The selected option(s) are configured.

Field Descriptions

Table 5-15 lists the field descriptions to configure OSPF Areas.

Table 5-15: *OSPF Areas Menu Field Descriptions*

Field	Description
Area ID: *(text field)*	Identifies the network area in "dotted decimal notation." An area is a group of contiguous networks and attached hosts. Each OSPF router must be configured into at least one OSPF area. ***Note:*** *The area with an ID of 0.0.0.0 is the backbone area. An OSPF network must at least have a backbone network. All other areas must adjoin the backbone area directly. Any other value can be chosen for non-backbone area IDs.*
Area Type: *(option field)*	Indicates the type of area to configure. The choices are: *Normal*, *Stub* or *Not-So-Stubby Area* (NSSA). Selecting Stub, or NSSA is recommended for OSPF areas that are connected to other areas through one or more Area Border Routers (ABR). Stub Area routing is based on default fixed routes and predefined routing paths. The Stub Area represents a "dead end" in the network. An entire Stub Area is configured in order for all items within that area to have the same cost. This is beneficial because any connected routers will require less memory and generally create less network traffic when transferring their link databases. Stub Areas do not allow Virtual links or the flooding of Autonomous System (AS) external routes into or through the area. Stub Areas and NSSAs should be defined when there are many AS external routes and access to these routes is through a single point in the network. The backbone area cannot be a Stub Area or NSSA. NSSAs are more flexible than Stub Areas. An NSSA can import a selected number of external routes into the OSPF routing domain, enabling the NSSA to provide transit service to small stub routing domains that themselves are not part of the OSPF routing domain. For example, a RIP cloud behind a DNX-1u router. ***Note:*** *In order for an NSSA to advertise its learned routes into the rest of the AS, the NSSA Area Border Router (ABR) must be set as an Autonomous System Boundary Router (ASBR).*
Stub Metric: *(text field)*	Specifies the number of links or hops (cost) between the source and the Stub Area or NSSA. ***Note:*** *The ABR that borders a Stub Area or NSSA will broadcast a default route instead of AS External routes. The stub metric is the cost associated with this default route. This field is only used by an ABR that borders a Stub Area or NSSA.*

OSPF Circuit Configuration

The DNX-1u is capable of acting as a Designated Router (DR) to provide Link State Advertisement (LSA) flooding for all other routers on the Broadcast network.

The DNX-1u supports the following types of OSPF circuit diagnostics:

- **Trace Neighboring Router (Trace NBR)**—Allows neighbor trace information to be reported and sent to the System Event Log.
- **Trace Link State Advertisements (Trace LSAs)**—Allows LSA trace information to be reported and sent to the System Event Log.
- **Trace Designated Router (Trace DR)**—Allows DR trace information to be reported and sent to the System Event Log.

Note: *To utilize OSPF, the Advanced Routing Option Feature Key must be enabled.*

Navigation:
DNX-1u Main Menu ↓ Configuration ↓ Subsystem Profile ↓ Select ROUTER ↓ IP and OSPF ↓ OSPF Circuits

Configuring OSPF Circuits

To configure OSPF Circuits, follow the procedure below.

1. From the DNX-1u Main Menu, click on **Configuration**, **Subsystem Profile**, **ROUTER** and then on **IP and OSPF**.

   The IP Configuration screen is displayed.

2. Select **OSPF Circuits** and press **Enter**.

   The OSPF Circuit Menu is displayed.

Figure 5-41: *OSPF Circuit Menu*

```
System ID: DNX-1u No. 1                                          Help = [?]
Sycamore Networks, Inc.           DNX-1u


OSPF Circuit Menu:
External metrics..: AS Type 2           Trace NBR.........: Enable
Auto virt links...: Enable              Trace LSA.........: Enable
AS Boundary Router: Yes                 Trace DR..........: Enable
Support Opaque LSA: Yes
Router Priority...: 1

PORT   AREA ID           PORT   AREA ID
LAN    0.0.0.0           WAN 11 0.0.0.0
WAN 1  0.0.0.0           WAN 12 0.0.0.0
WAN 2  0.0.0.0           WAN 13 0.0.0.0
WAN 3  0.0.0.0           WAN 14 0.0.0.0
WAN 4  0.0.0.0
WAN 5  0.0.0.0
WAN 6  0.0.0.0
WAN 7  0.0.0.0
WAN 8  0.0.0.0
WAN 9  0.0.0.0

Priority Range: 0-255
```

3. Modify the selected field(s). For information on these fields, refer to the following section *Field Descriptions*.
4. When you select an *Area ID*, the OSPF Circuit Entry Menu is displayed.

Figure 5-42: *OSPF Circuit Entry Menu*

```
System ID: DNX-1u No. 1                                          Help = [?]
Sycamore Networks, Inc.           DNX-1u

OSPF Circuit Entry Menu:

Virtual Port .....: LAN
Area ID...........: 0.0.0.0
Auth Type.........: None
Auth Key..........:
Hello Interval....: 10
Dead Interval.....: 30
Transit Delay.....: 1
Retrans Interval..: 5
```

5. Modify the selected field(s). For information on these fields, refer to the following section *Field Descriptions*.
6. When complete, press **X** to exit the screen.

   A message is displayed asking if you want to update the configuration.
7. Press **Y**.

   The selected option(s) are configured.

Field Descriptions

Table 5-16 lists the field descriptions to configure OSPF Circuits.

Table 5-16: *OSPF Circuit Menu Field Descriptions*

Field	Description
External Metrics: *(option field)*	Defines the external metric route option. The choices are: • *AS Type 1* - Routes come from Interior Gateway Protocols whose external metrics are directly comparable to OSPF metrics. When a routing decision is being made, OSPF will add the internal cost of the route to the Autonomous Area Border/Boundary Router (ASBR) to the external metric. AS Type 1 attempts to apply OSPF-style metrics to the AS external route. • *AS Type 2* - Routes are used for Exterior Gateway Protocols whose metrics are not comparable to OSPF metrics. In this case, only the internal OSPF cost to the ASBR is used in the routing decision. AS Type 2 uses only the route metric provided by the external route protocol. AS Type 2 metrics are the default and preferred mechanism. OSPF calls the network of routers that exchange route information using the same routing protocol (and is under the same administration) an Autonomous System (AS). Routes generated by protocols other than OSPF, such as RIP or Static Routes are termed AS External routes.
Auto Virt Links: *(option field)*	Specifies the auto sending of Virtual links. The options are *Enable* or *Disable*. Virtual links connect physically separate components of the backbone area. The two endpoints of a Virtual link are Area Border Routers (ABR). The Virtual link must be enabled in both routers. Virtual links are a mechanism used by OSPF to connect non-contiguous routers into a single area or to connect to the backbone an area that doesn't directly adjoin the backbone. When this field is enabled, these virtual links will be generated automatically when necessary.
AS Boundary Router: *(option field)*	Sets the Router module to be an ASBR, which is a router that exchanges routing information with routers belonging to other Autonomous Systems (AS). Such a router has AS external routes that are advertised throughout the AS. The path to each ASBR is known by every router in the AS. The choices are *Yes* or *No*. A router that borders a non-OSPF AS is called an ASBR. If the router being configured is an ASBR, that is, if it is the source of AS External routes, and this field is set to Yes, the ASBR should flood its AS External routes into the OSPF Area.
Support Opaque LSA: *(option field)*	Select *Yes* if the router is to set the O-bit in the HELLO message header, indicating the routers supports Opaque LSA. Otherwise, select *No*.

Table 5-16: *OSPF Circuit Menu Field Descriptions*

Field	Description
Router Priority: *(option field)*	Specifies the priority of the router that determines which router will be used as the designated router and perform the Link State Advertisement flooding for all the other routers on the broadcast network. When multiple routers are interconnected over a broadcast medium, such as Ethernet, one of the routers is elected the designated router. If there is a need to ensure that this router will be elected designated router, set the priority field to a higher number than the other routers. The values are *0* to *255*. If the priority is set to *0*, this router cannot be selected as a designated router.
Trace NBR: *(option field)*	Specifies the debug flag that traces Neighboring Router (NBR) events. The options are *Enable* or *Disable*. When enabled, NBR trace information is written to the System Event Log.
Trace LSA: *(option field)*	Specifies the debug flag that traces Link State Advertisements (LSAs). The options are *Enable* or *Disable*. When enabled, LSA trace information is written to the System Event Log.
Trace DR: *(option field)*	Specifies the debug flag that traces Designated Router (DR) events. The options are *Enable* or *Disable*. When enabled, designated router trace information is written to the System Event Log.

Field Descriptions

Table 5-17 lists the field descriptions for the OSPF Circuit Entry Menu.

Table 5-17: *OSPF Circuit Entry Menu Field Descriptions*

Field	Description
Virtual Port: *(display field)*	Specifies the Virtual port (*LAN* or *WAN 1-14*) where the OSPF circuit is configured. The Virtual port, along with the Area ID, specifies the areas that each port directly interfaces with.
Area ID: *(text field)*	The IP address of the network area to which the Logical port belongs. An Area is a group of contiguous networks and attached hosts.
Auth Type: *(option field)*	Specifies the authorization type. The options are: *None*, *Simple* and *MD5*. ***Note:*** *MD5 can be configured; however, it is not supported.*
Auth Key: *(text field)*	Used to generate and verify the authentication field in the OSPF header. Enter an area-wide password of up to *eight* alphanumeric characters for each interface in order to protect the network routers against unauthorized routing information.
Hello Interval: *(text field)*	Specifies the length of time, in seconds (*1* to *65535*), between Hello packet transmissions. Hello Packets are used to verify two-way communication between neighboring routers and to synchronize their topological database. The default setting is *10* seconds for LAN and *30* seconds for WAN.
Dead Interval: *(text field)*	Specifies the length of time, in seconds (*1* to *2147483647*), to transpire without hearing a router's Hello packets before the router's neighbors will declare it down. The default setting is *30* seconds for LAN and *90* seconds for WAN.
Transit Delay: *(text field)*	Specifies the length of time, in seconds (*1* to *3600*), to transmit a link state update over the interface. Transit delay takes transmission and propagation delays into account. The default setting is *1* second for LAN and WAN.
Retrans Interval: *(text field)*	Specifies the length of time, in seconds (*1* to *3600*), between LSA retransmissions. An OSPF router will periodically advertise the state of its router links (interfaces), networks, summaries or AS External links by sending a LSA. If an LSA is not acknowledged, it will be retransmitted at the time specified in this field. The default setting is *5* seconds for LAN and WAN.

OSPF Virtual Link Configuration

The DNX-1u supports both manual and automatic Virtual links. An OSPF Virtual link can be established to link an area to a backbone that is not physically connected to the backbone. This link provides a logical path to the backbone by way of the transit area, which is established as a result of the Virtual link configuration. This command and supportive menus allow the static configuration of Virtual links.

Note: *The two endpoints of the Virtual link must always be an ABR with one endpoint connected to the backbone. A Virtual link must always be configured in both ABRs.*

Note: *To utilize OSPF, the Advanced Routing Option Feature Key must be enabled.*

Navigation:
DNX-1u Main Menu ↓ Configuration ↓ Subsystem Profile ↓ Select ROUTER ↓ IP and OSPF ↓ OSPF Virtual Links

Configuring OSPF Virtual Links

To configure OSPF Virtual links, follow the procedure below.

1. From the DNX-1u Main Menu, click on **Configuration**, **Subsystem Profile**, **ROUTER** and then on **IP and OSPF**.

   The IP Configuration screen is displayed.

2. Select **OSPF Virtual Links** and press **Enter**.

   The OSPF Virtual Links Configuration Menu is displayed.

Figure 5-43: *OSPF Virtual Links Configuration Menu*

```
System ID: DNX-1u No. 1                                          Help = [?]
Sycamore Networks, Inc.           DNX-1u

OSPF Virtual Links Configuration Menu:  Page 1 of 2
Transit Area ID  Remote Router ID Hello  Dead        Trans Retrn Auth   Key
0.0.0.0          0.0.0.0          0      0           0     0     None
0.0.0.0          0.0.0.0          0      0           0     0     None
0.0.0.0          0.0.0.0          0      0           0     0     None
0.0.0.0          0.0.0.0          0      0           0     0     None
0.0.0.0          0.0.0.0          0      0           0     0     None
0.0.0.0          0.0.0.0          0      0           0     0     None
0.0.0.0          0.0.0.0          0      0           0     0     None
0.0.0.0          0.0.0.0          0      0           0     0     None
0.0.0.0          0.0.0.0          0      0           0     0     None
0.0.0.0          0.0.0.0          0      0           0     0     None
0.0.0.0          0.0.0.0          0      0           0     0     None
0.0.0.0          0.0.0.0          0      0           0     0     None
0.0.0.0          0.0.0.0          0      0           0     0     None
0.0.0.0          0.0.0.0          0      0           0     0     None
0.0.0.0          0.0.0.0          0      0           0     0     None
0.0.0.0          0.0.0.0          0      0           0     0     None

                                        Page next/prev     = ['+'/'-']
                                        Entry up/down      = ['u'/'d']
                                        Entry insert/erase = ['i'/'e']
```

3. Modify the selected field(s). For information on these fields, refer to the following section *Field Descriptions*.
4. When you select a *Transit Area ID*, another OSPF Virtual Link Configuration Menu is displayed.

Figure 5-44: *OSPF Virtual Link Configuration Menu*

```
System ID: DNX-1u No. 1                                          Help = [?]
Sycamore Networks, Inc.           DNX-1u

OSPF Virtual Link Configuration Menu:

Transit Area ID...: 0.0.0.0
Remote Router ID..: 0.0.0.0
Hello Interval....: 0
Dead Interval.....: 0
Transit Delay.....: 0
Retrans Interval..: 0
Auth Type.........: None
Auth Key..........:
```

5. Modify the selected field(s). For information on these fields, refer to the following section *Field Descriptions*.
6. When complete, press **X** to exit the screen.

   A message is displayed asking if you want to update the configuration.
7. Press **Y**.

   The selected option(s) are configured.

Field Descriptions

Table 5-18 lists the field descriptions to configure OSPF Virtual links.

Table 5-18: *OSPF Virtual Links Configuration Menu Field Descriptions*

Field	Description
Transit Area ID: *(text field)*	Identifies the area ID where the Virtual link will pass through if the peer router is a DNX-1u.
Remote Router ID: *(text field)*	Specifies the IP address of the router to be used at the other end of the Virtual link. Router IDs are typically the smallest IP address assigned to any port on a router; however, in this instance, this is the IP address of the first Logical port. Typically the Ethernet port.
Hello/Hello Interval Router: *(text field)*	Specifies the length of time in seconds (*1* to *65535*) to verify two-way communication between neighboring routers and to synchronize their topological database. This parameter is the interval in seconds between Hello message transmissions. The smaller the value, the more quickly topology changes are recognized. An initial setting of *30* seconds is recommended as a starting point. A sample value for an Ethernet port is *10* and a sample value for a serial port is *30*.
Dead/Dead Interval: *(text field)*	Specifies the length of time in seconds (*1* to *2147483647*) to transpire without hearing a router's Hello packets before the router's neighbors will declare it down. The default setting is *30* seconds for LAN and *90* seconds for WAN. An initial setting of *90* seconds is recommended as a starting point. ***Note:*** *This field must be set the same for all routers within the same area. In addition, this parameter is the number of seconds before a neighbor router is declared down. This should be a multiple (typically 4) of the Hello interval.*
Trans/Transit Delay: *(text field)*	Specifies the length of time in seconds (*1* to *3600*) to transmit a link state update over the interface. Transit delay takes transmission and propagation delays into account. The default setting is *1* second for LAN and WAN. An initial setting of *1* second is recommended as a starting point. ***Note:*** *This parameter is the estimated numbers of seconds of delay any update messages will incur through this interface. The value must be greater than 0. For an Ethernet interface, a value of 1 should be sufficient.*
Retrans Interval: *(text field)*	Specifies the length of time in seconds (*1* to *3600*) between LSA retransmissions. An OSPF router will periodically advertise the state of its router links (interfaces), networks, summaries or AS External links by sending a LSA. If an LSA is not acknowledged, it will be retransmitted at the time specified in this field. The default setting is *5* seconds for LAN and WAN.
Auth Type: *(option field)*	Indicates the authorization type, either *None*, *Simple* or *MD5*. ***Note:*** *MD5 can be configured; however, it is not supported.*
Auth Key: *(text field)*	Used to generate and verify the authentication field in the OSPF header. Enter an area-wide password of up to *eight* alphanumeric characters for each interface in order to protect the network routers against accessing unauthorized routing information.

OSPF Range Configuration

In order to combine OSPF routing information at area boundaries, each address range can be specified by an address or mask pair. In addition, and advertisement can be allowed or disallowed.

Note: *If the DNX-1u is an ABR, the address ranges associated with each area must be specified. The area specified for each entry is the area where the routes are learned and not the area where they are summarized. If the router is not an ABR, these menus are not used. Address ranges only combine routing information from inter-area routes. They do not apply to any AS External routes being imported into OSPF.*

Note: *To utilize OSPF, the Advanced Routing Option Feature Key must be enabled.*

Navigation:
DNX-1u Main Menu ↓ Configuration ↓ Subsystem Profile ↓ Select ROUTER ↓ IP and OSPF ↓ OSPF Ranges

Configuring OSPF Ranges

To configure OSPF Ranges, follow the procedure below.

1. From the DNX-1u Main Menu, click on **Configuration**, **Subsystem Profile**, **ROUTER** and then on **IP and OSPF**.

   The IP Configuration screen is displayed.

2. Select **OSPF Ranges** and press **Enter**.

   The OSPF Ranges Configuration Menu is displayed.

Figure 5-45: *OSPF Ranges Configuration Menu*

```
System ID: DNX-1u No. 1                                          Help = [?]
Sycamore Networks, Inc.           DNX-1u

OSPF Ranges Configuration Menu:         Page 1 of 2
Area ID             IP Address          Mask                Advertise
0.0.0.0             0.0.0.0             0.0.0.0             No
0.0.0.0             0.0.0.0             0.0.0.0             No
0.0.0.0             0.0.0.0             0.0.0.0             No
0.0.0.0             0.0.0.0             0.0.0.0             No
0.0.0.0             0.0.0.0             0.0.0.0             No
0.0.0.0             0.0.0.0             0.0.0.0             No
0.0.0.0             0.0.0.0             0.0.0.0             No
0.0.0.0             0.0.0.0             0.0.0.0             No
0.0.0.0             0.0.0.0             0.0.0.0             No
0.0.0.0             0.0.0.0             0.0.0.0             No
0.0.0.0             0.0.0.0             0.0.0.0             No
0.0.0.0             0.0.0.0             0.0.0.0             No
0.0.0.0             0.0.0.0             0.0.0.0             No
0.0.0.0             0.0.0.0             0.0.0.0             No
0.0.0.0             0.0.0.0             0.0.0.0             No
0.0.0.0             0.0.0.0             0.0.0.0             No

                                        Page next/prev     = ['+'/'-']
                                        Entry up/down      = ['u'/'d']
                                        Entry insert/erase = ['i'/'e']
```

3. Modify the selected field(s). For information on these fields, refer to the following section *Field Descriptions*.
4. When you select a *Area ID*, another OSPF Range Configuration Menu is displayed.

Figure 5-46: *OSPF Range Configuration Menu*

```
System ID: DNX-1u No. 1                                          Help = [?]
Sycamore Networks, Inc.           DNX-1u

OSPF Range Configuration Menu:

Area ID...........: 0.0.0.0
IP Address........: 0.0.0.0
Mask..............: 0.0.0.0
Advertise.........: No
```

5. Modify the selected field(s). For information on these fields, refer to the following section *Field Descriptions*.
6. When complete, press **X** to exit the screen.

   A message is displayed asking if you want to update the configuration.
7. Press **Y**.

   The selected option(s) are configured.

Field Descriptions

Table 5-19 lists the field descriptions to configure OSPF Ranges.

Table 5-19: *OSPF Ranges Configuration Menu Field Descriptions*

Field	Description
Area ID: *(text field)*	Specifies the Area ID for a network area. An Area is a group of contiguous networks and attached hosts. Each OSPF router must be configured into at least one OSPF Area.
IP Address: *(text field)*	Specifies the IP address of the OSPF Range that falls within the Area ID.
Mask: *(text field)*	Overrides the automatically-generated mask to support subnetting. This field indicates the range of IP addresses residing on a single IP network/subnet/supernet. The mask is represented in “dotted decimal” notation.
Advertise: *(option field)*	Determines if the router module will advertise. The choices are *Yes* or *No*. Select Yes to allow the Router Module to advertise. When a new router is added, that router will advertise its location to neighboring routers.

Static Route Filters

The Static Route Filters Configuration Menu allows for the leaking of Static Routes into OSPF and RIP. When this option is set to “Yes”, the routes that match the IP address and IP mask pair will be leaked to the specified protocol. The default behavior for all Route Filters is to not leak any routes between routing protocols. Any routes to be leaked between protocols must be explicitly configured in the filter.

Note: *To utilize OSPF, the Advanced Routing Option Feature Key must be enabled.*

Navigation:
DNX-1u Main Menu ↓ Configuration ↓ Subsystem Profile ↓ Select ROUTER ↓ IP and OSPF ↓ Static Route Filters

Configuring Static Route Filters

To configure Static Route Filters, follow the procedure below.

1. From the DNX-1u Main Menu, click on **Configuration**, **Subsystem Profile**, **ROUTER** and then on **IP and OSPF**.

   The IP Configuration screen is displayed.

2. Select **Static Route Filters** and press **Enter**.

   The Static Route Filters screen is displayed.

Figure 5-47: *Static Route Filters Screen*

```
System ID: DNX-1u No. 1                                          Help = [?]
Sycamore Networks, Inc.          DNX-1u

                                        Page 1 of 2
IP Address          Mask                OSPF      RIP
0.0.0.0             0.0.0.0             No        No
0.0.0.0             0.0.0.0             No        No
0.0.0.0             0.0.0.0             No        No
0.0.0.0             0.0.0.0             No        No
0.0.0.0             0.0.0.0             No        No
0.0.0.0             0.0.0.0             No        No
0.0.0.0             0.0.0.0             No        No
0.0.0.0             0.0.0.0             No        No
0.0.0.0             0.0.0.0             No        No
0.0.0.0             0.0.0.0             No        No
0.0.0.0             0.0.0.0             No        No
0.0.0.0             0.0.0.0             No        No
0.0.0.0             0.0.0.0             No        No
0.0.0.0             0.0.0.0             No        No
0.0.0.0             0.0.0.0             No        No
0.0.0.0             0.0.0.0             No        No
0.0.0.0             0.0.0.0             No        No

                                        Page next/prev     = ['+'/'-']
                                        Entry up/down      = ['u'/'d']
                                        Entry insert/erase = ['i'/'e']
```

3. Modify the selected field(s). For information on these fields, refer to the following section *Field Descriptions*.
4. When you select a *IP Address*, another Static Route Filters screen is displayed.

Figure 5-48: *Static Route Filters Entry Screen*

```
System ID: DNX-1u No. 1                                          Help = [?]
Sycamore Networks, Inc.          DNX-1u



IP address...........: 0.0.0.0
Network mask.........: 0.0.0.0
Leak to OSPF.........: No
Leak to RIP..........: No
```

5. Modify the selected field(s). For information on these fields, refer to the following section *Field Descriptions*.
6. When complete, press **X** to exit the screen.

   A message is displayed asking if you want to update the configuration.
7. Press **Y**.

   The selected option(s) are configured.

Field Descriptions

Table 5-20 lists the field descriptions to configure Static Route Filters.

Table 5-20: *Static Route Filters Screen Field Descriptions*

Field	Description
IP Address: *(text field)*	Specifies the IP address for the filter being configured.
Network Mask: *(text field)*	Used to override the automatically-generated network mask to support subnetting. The mask is represented in “dotted decimal notation.”
Leak to OSPF: *(option field)*	Allows you to leak Static Routes in this subnet for this protocol. The options are *Yes* to enable OSPF leaking or *No* to disable.
Leak to RIP: *(option field)*	Allows you to create a unique routing table that identifies the best path from itself to all other routers in the network. The options are *Yes* to enables RIP leaking or *No* to disable.

OSPF Route Filters

OSPF Route Filters are used to control how much routing information is passed between OSPF and RIP. Similar to Static Route Filters, these menus allow leakage of OSPF-generated routes to RIP. The default behavior for all Route Filters is to not leak any routes between routing protocols. Any routes to be leaked between protocols must be explicitly configured in the filter.

Note: *To utilize OSPF, the Advanced Routing Option Feature Key must be enabled.*

Navigation:
DNX-1u Main Menu ↓ Configuration ↓ Subsystem Profile ↓ Select ROUTER ↓ IP and OSPF ↓ OSPF Route Filters

Configuring OSPF Route Filters

To configure OSPF Route Filters, follow the procedure below.

1. From the DNX-1u Main Menu, click on **Configuration**, **Subsystem Profile**, **ROUTER** and then on **IP and OSPF**.

   The IP Configuration screen is displayed.

2. Select **OSPF Route Filters** and press **Enter**.

   The OSPF Route Filters screen is displayed.

Figure 5-49: *OSPF Route Filters Screen*

```
System ID: DNX-1u No. 1                                          Help = [?]
Sycamore Networks, Inc.          DNX-1u

                                       Page 1 of 2
IP Address          Mask               RIP
0.0.0.0             0.0.0.0            No
0.0.0.0             0.0.0.0            No
0.0.0.0             0.0.0.0            No
0.0.0.0             0.0.0.0            No
0.0.0.0             0.0.0.0            No
0.0.0.0             0.0.0.0            No
0.0.0.0             0.0.0.0            No
0.0.0.0             0.0.0.0            No
0.0.0.0             0.0.0.0            No
0.0.0.0             0.0.0.0            No
0.0.0.0             0.0.0.0            No
0.0.0.0             0.0.0.0            No
0.0.0.0             0.0.0.0            No
0.0.0.0             0.0.0.0            No
0.0.0.0             0.0.0.0            No
0.0.0.0             0.0.0.0            No

                                       Page next/prev     = ['+'/'-']
                                       Entry up/down      = ['u'/'d']
                                       Entry insert/erase = ['i'/'e']
```

3. Modify the selected field(s). For information on these fields, refer to the following section *Field Descriptions*.
4. When you select a *IP Address*, another OSPF Route Filters screen is displayed.

Figure 5-50: *OSPF Route Filters Entry Screen*

```
System ID: DNX-1u No. 1                                          Help = [?]
Sycamore Networks, Inc.          DNX-1u


IP address........: 0.0.0.0
Network mask......: 0.0.0.0
Leak to RIP.......: No
```

5. Modify the selected field(s). For information on these fields, refer to the following section *Field Descriptions*.
6. When complete, press **X** to exit the screen.

   A message is displayed asking if you want to update the configuration.
7. Press **Y**.

   The selected option(s) are configured.

Field Descriptions

Table 5-21 lists the field descriptions to configure OSPF Route FIlters.

Table 5-21: *OSPF Route Filters Screen Field Descriptions*

Field	Description
IP Address: *(text field)*	Specifies the IP address for the filter being configured.
Network Mask: *(text field)*	Used to override the automatically-generated network mask to support subnetting. The mask is represented in “dotted decimal notation.”
Leak to RIP: *(option field)*	Allows you to leak OSPF Routes for this subnet into RIP. The options are *Yes* to enables RIP leaking or *No* to disable.

RIP Route Filters

RIP Route Filters are used to control the amount of routing information that is passed between RIP and OSPF. These menus allow the leakage of RIP routes to OSPF. The default behavior for all Route Filters is to not leak any routes between routing protocols. Any routes to be leaked between protocols must be explicate configured in the filter.

Note: *To utilize OSPF, the Advanced Routing Option Feature Key must be enabled.*

Navigation:
DNX-1u Main Menu ↓ Configuration ↓ Subsystem Profile ↓ Select ROUTER ↓ IP and OSPF ↓ RIP Route Filters

Configuring RIP Route Filters

To configure RIP Route Filters, follow the procedure below.

1. From the DNX-1u Main Menu, click on **Configuration**, **Subsystem Profile**, **ROUTER** and then on **IP and OSPF**.

   The IP Configuration screen is displayed.

2. Select *RIP Route Filters* and press **Enter**.

   The RIP Route Filters screen is displayed.

Figure 5-51: *RIP Route Filters Screen*

```
System ID: DNX-1u No. 1                                          Help = [?]
Sycamore Networks, Inc.          DNX-1u

                                        Page 1 of 2
IP Address          Mask                OSPF
0.0.0.0             0.0.0.0             No
0.0.0.0             0.0.0.0             No
0.0.0.0             0.0.0.0             No
0.0.0.0             0.0.0.0             No
0.0.0.0             0.0.0.0             No
0.0.0.0             0.0.0.0             No
0.0.0.0             0.0.0.0             No
0.0.0.0             0.0.0.0             No
0.0.0.0             0.0.0.0             No
0.0.0.0             0.0.0.0             No
0.0.0.0             0.0.0.0             No
0.0.0.0             0.0.0.0             No
0.0.0.0             0.0.0.0             No
0.0.0.0             0.0.0.0             No
0.0.0.0             0.0.0.0             No
0.0.0.0             0.0.0.0             No

                                        Page next/prev     = ['+'/'-']
                                        Entry up/down      = ['u'/'d']
                                        Entry insert/erase = ['i'/'e']
```

3. Modify the selected field(s). For information on these fields, refer to the following section *Field Descriptions*.
4. When you select a *IP Address*, another RIP Route Filters screen is displayed.

Figure 5-52: *RIP Route Filters Entry Screen*

```
System ID: DNX-1u No. 1                                          Help = [?]
Sycamore Networks, Inc.          DNX-1u


IP address........: 0.0.0.0
Network mask......: 0.0.0.0
Leak to OSPF......: No
```

5. Modify the selected field(s). For information on these fields, refer to the following section *Field Descriptions*.
6. When complete, press **X** to exit the screen.

   A message is displayed asking if you want to update the configuration.
7. Press **Y**.

   The selected option(s) are configured.

Field Descriptions

Table 5-22 lists the field descriptions to configure RIP Route FIlters.

Table 5-22: *RIP Route Filters Screen Field Descriptions*

Field	Description
IP Address: *(text field)*	Specifies the IP address for the filter being configured.
Network Mask: *(text field)*	Used to override the automatically-generated network mask to support subnetting. The mask is represented in “dotted decimal notation.”
Leak to OSPF: *(option field)*	Allows you to leak RIP Routes for this subnet to OSPF. The options are *Yes* to enable or *No* to disable.

DHCP Server Configuration

The DHCP (Dynamic Host Configuration Protocol) Server Menu allows the Router Subsystem to be set up as a DHCP Server. DHCP is a "plug-'n-play" facilitator that operates as an automated network administrator. It works with devices on a LAN that are designed to interface to the DHCP server. Such devices are called DHCP Clients. DHCP Clients must meet the requirements of interfacing to the DHCP Host with a protocol that is defined in Reference Documents RFC-2131 and RFC-2132.

Before DHCP was available, a network administrator had to manually assign a temporary IP address to a visiting client in order to grant it access to the Local Area Network. When the client was moved, or had logged off, the Network Administrator had to manually free up the IP address by removing it from the IP address table in the server. DHCP offers a way to administer dynamic network configuration with minimal human intervention. DHCP also offers a management tool whereby Server-Client activity can be audited and monitored.

The DHCP Server is not designed to implement Boot-P server functions. A full Boot-P server is technically obsolete because DHCP clients are stand-alone systems with their own memory, hard-drive, and operating systems. Boot-P was used in the past when RAM and hard disk drives were prohibitively expensive.

Navigation:
DNX-1u Main Menu ↓ Configuration ↓ Subsystem Profile ↓ Select ROUTER ↓ **[Enter]** Subsystem Cfg ↓ DHCP Server

Configuring DHCP Server Information

To configure DHCP Server information, follow the procedure below.

1. From the DNX-1u Main Menu, click on **Configuration**, **Subsystem Profile**, **ROUTER** and then on **DHCP Server**.

   The DHCP Main Menu is displayed.

Figure 5-53: *DHCP Main Menu*

```
System ID: DNX-1u No. 1                                          Help = [?]
Sycamore Networks, Inc.          DNX-1u


                                 DHCP Main Menu


                              DHCP Dynamic Configuration
                              DHCP Static Configuration
                              DHCP Statistics
                              DHCP Options
```

2. From the DHCP Main Menu you can:
   - Perform DHCP Dynamic Configuration
   - Perform DHCP Static Configuration
   - View DHCP Statistics including DHCP Pool and Used IP Statistics
   - DHCP Options, such as Netbios Node Type, Netbios Scope, and Netbios Name Server.

Note: *You must first go to the DHCP Options Menu and ensure that DHCP is enabled, otherwise the other menu selections will not function.*

3. Refer to the sections below for procedures to perform the above functions.

DHCP Dynamic Configuration

Dynamic DHCP is best suited for devices that are temporarily using a network, but will not usually be present. A prime example of this is to support the field technicians who are on-site to perform installations and repairs. While the technician is on-site, their laptop can be assigned an address, making the configuration and IP routing issues for this wandering user “non-existent”. Dynamic DHCP is configured using the DHCP Server Dynamic Configuration Menu.

Note: *You must first go to the DHCP Options Menu and ensure that DHCP is enabled, otherwise you will not be able to access the DHCP Server Dynamic Configuration Menu.*

Navigation:
DNX-1u Main Menu ↓ Configuration ↓ Subsystem Profile ↓ Select ROUTER ↓ **[Enter]** Subsystem Cfg ↓ DHCP Server ↓ DHCP Dynamic Configuration

Setting Up a DHCP Dynamic Configuration

To set up a DHCP Dynamic configuration, follow the procedure below.

1. From the DNX-1u Main Menu, click on **Configuration**, **Subsystem Profile**, **ROUTER** and then on **DHCP Server**.

   The DHCP Main Menu is displayed.

2. Select *DHCP Dynamic Configuration* and press **Enter**.

   The DHCP Server Dynamic Configuration screen is displayed.

Figure 5-54: *DHCP Server Dynamic Configuration Screen*

```
System ID: DNX-1u No. 1                                          Help = [?]
Sycamore Networks, Inc.           DNX-1u
                       DHCP Server Dynamic Configuration
                                       Page 1 of 1

Network Name    1st IP Address   GateWay          Subnet Mask
:...........    0.0.0.0          0.0.0.0          0.0.0.0
:...........    0.0.0.0          0.0.0.0          0.0.0.0
:...........    0.0.0.0          0.0.0.0          0.0.0.0
:...........    0.0.0.0          0.0.0.0          0.0.0.0
:...........    0.0.0.0          0.0.0.0          0.0.0.0
:...........    0.0.0.0          0.0.0.0          0.0.0.0
:...........    0.0.0.0          0.0.0.0          0.0.0.0
:...........    0.0.0.0          0.0.0.0          0.0.0.0
:...........    0.0.0.0          0.0.0.0          0.0.0.0
:...........    0.0.0.0          0.0.0.0          0.0.0.0
:...........    0.0.0.0          0.0.0.0          0.0.0.0
:...........    0.0.0.0          0.0.0.0          0.0.0.0
:...........    0.0.0.0          0.0.0.0          0.0.0.0
:...........    0.0.0.0          0.0.0.0          0.0.0.0

                                       Page next/prev = ['+'/'-']
```

3. Move your cursor to the network you want to configure and press **Enter**.

   The DHCP Server Pool Configuration screen is displayed.

Figure 5-55: *DHCP Server Pool Configuration Screen (Dynamic)*

```
System ID: DNX-1u No. 1                                          Help = [?]
Sycamore Networks, Inc.           DNX-1u
                        DHCP Server Pool Configuration

Network Name....................: :...........
First IP Address................: 0.0.0.0
Last IP Address.................: 0.0.0.0
Gateway IP Address..............: 0.0.0.0
Sub Network Mask................: 0.0.0.0
Primary Domain Server Address...: 0.0.0.0
Secondary Domain Server Address.: 0.0.0.0
Lease Time In Second............: 600
```

4. Modify the selected field(s). For information on these fields, refer to the following section *Field Descriptions*.
5. After the DHCP information is configured, press **X** to exit the screen.

   A message is displayed asking if you want to update the configuration.
6. Press **Y**.

   The selected DHCP information is configured.

Note: *All Mandatory fields must be filled in. Any missing or incorrect information will result in an error message informing you which field is missing the information. Pressing any key will return you to the DHCP Server Dynamic Configuration screen, and you will need to re-select the network and re-enter the correct information.*

Field Descriptions

Table 5-23 lists the field descriptions to set up a DHCP Dynamic configuration.

Table 5-23: *DHCP Server Pool Configuration Field Descriptions (Dynamic)*

Field	Description
Network Name: *(text field)*	Specifies a unique name, up 10 14 alphanumeric characters, to identify the DHCP pool. It is not used in assigning addresses to DHCP clients. This is a mandatory field.
First IP Address: *(text field)*	Specifies the first IP address within the assignable DHCP pool in “dotted decimal notation”. The range is *1.1.1.1* to *254.254.254.254*. This is a mandatory field.
Last IP Address: *(text field)*	Specifies the last IP address within the assignable DHCP pool in “dotted decimal notation”. The last IP address in the pool must be greater than the first global address. The range is *1.1.1.1* to *254.254.254.254*. This is a mandatory field.
Gateway IP Address: *(text field)*	Specifies the Gateway IP address in “dotted decimal notation”. The Gateway IP address is used by DHCP clients to identify the router that provides access to addresses that are NOT part of the local network. This is a mandatory field.
Sub Network Mask: *(text field)*	Specifies the subnet mask in “dotted decimal notation”. Range is *0.0.0.0* to *255.255.255.255*. This is a mandatory field.
Primary Domain Server Address: *(text field)*	Specifies the Primary Domain Server Address in “dotted decimal notation”. The DHCP client will use this address as the primary DNS server to resolve host names into IP addresses. The range is *1.1.1.1* to *254.254.254.254*. ***Note:****Both valid primary and secondary DNS addresses must be entered.*
Secondary Domain Server Address: *(text field)*	Specifies the Secondary Domain Server Address in “dotted decimal notation”. The DHCP client will use this address as the secondary DNS server to resolve host names into IP addresses. The range is *1.1.1.1* to *254.254.254.254*. ***Note:****Both valid primary and secondary DNS addresses must be entered.*
Lease Time in Second: *(text field)*	Indicates the time (in seconds) the lease on an IP address can continue. If the DHCP Server is configured to renew leases at sign-on, the IP address lease can be renewed when a client computer is “turned on”. When the time expires and the lease has not been renewed, the IP address will be returned to the pool. The default time is *600* seconds.

DHCP Static Configuration

Static DHCP is best for devices that will not move around much. By using Static DHCP, the configuration of the devices is greatly simplified, and network changes can be propagated to the nodes in a consistent manner. Static DHCP is configured using the DHCP Server Static Configuration Menu.

Note: *You must first go to the DHCP Options Menu and ensure that DHCP is enabled, otherwise you will not be able to access the DHCP Server Static Configuration Menu.*

Navigation:
DNX-1u Main Menu ↓ Configuration ↓ Subsystem Profile ↓ Select ROUTER ↓ **[Enter]** Subsystem Cfg ↓ DHCP Server ↓ DHCP Static Configuration

Setting Up a DHCP Static Configuration

To set up a DHCP Static configuration, follow the procedure below.

1. From the DNX-1u Main Menu, click on **Configuration**, **Subsystem Profile**, **ROUTER** and then on **DHCP Server**.

   The DHCP Main Menu is displayed.

2. Select *DHCP Static Configuration* and press **Enter**.

   The DHCP Server Static Configuration screen is displayed.

Figure 5-56: *DHCP Server Static Configuration Screen*

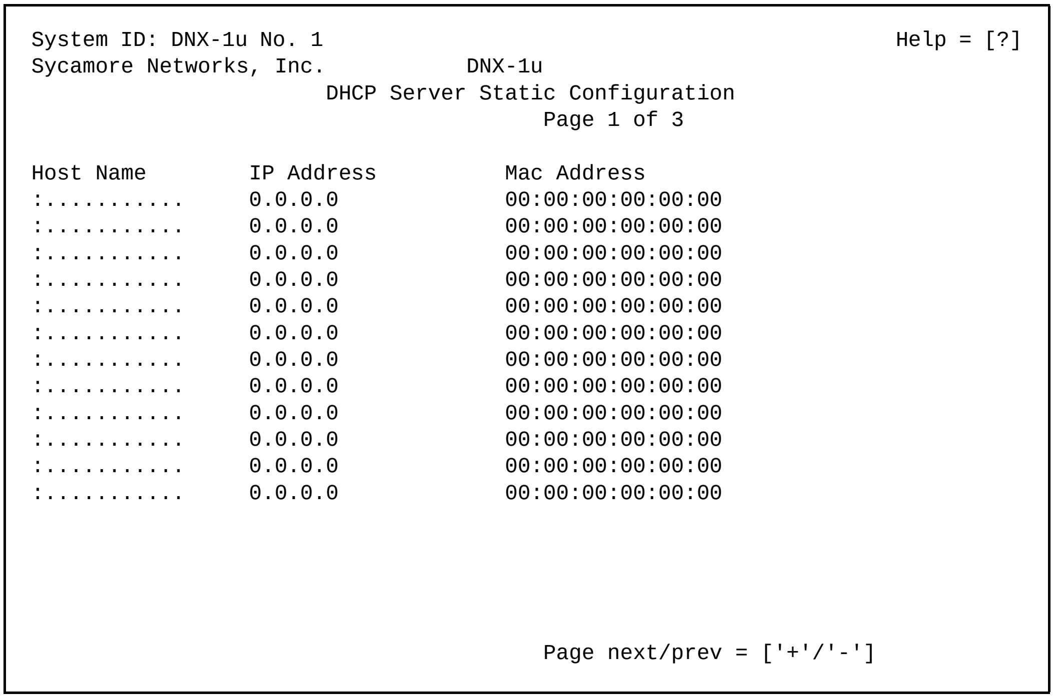

```
System ID: DNX-1u No. 1                                             Help = [?]
Sycamore Networks, Inc.           DNX-1u
                       DHCP Server Static Configuration
                                        Page 1 of 3

Host Name        IP Address          Mac Address
:...........     0.0.0.0             00:00:00:00:00:00
:...........     0.0.0.0             00:00:00:00:00:00
:...........     0.0.0.0             00:00:00:00:00:00
:...........     0.0.0.0             00:00:00:00:00:00
:...........     0.0.0.0             00:00:00:00:00:00
:...........     0.0.0.0             00:00:00:00:00:00
:...........     0.0.0.0             00:00:00:00:00:00
:...........     0.0.0.0             00:00:00:00:00:00
:...........     0.0.0.0             00:00:00:00:00:00
:...........     0.0.0.0             00:00:00:00:00:00
:...........     0.0.0.0             00:00:00:00:00:00
:...........     0.0.0.0             00:00:00:00:00:00





                                        Page next/prev = ['+'/'-']
```

3. Move your cursor to the host you want to configure and press **Enter**.

   The DHCP Server Pool Configuration screen is displayed.

Figure 5-57: *DHCP Server Pool Configuration Screen (Static)*

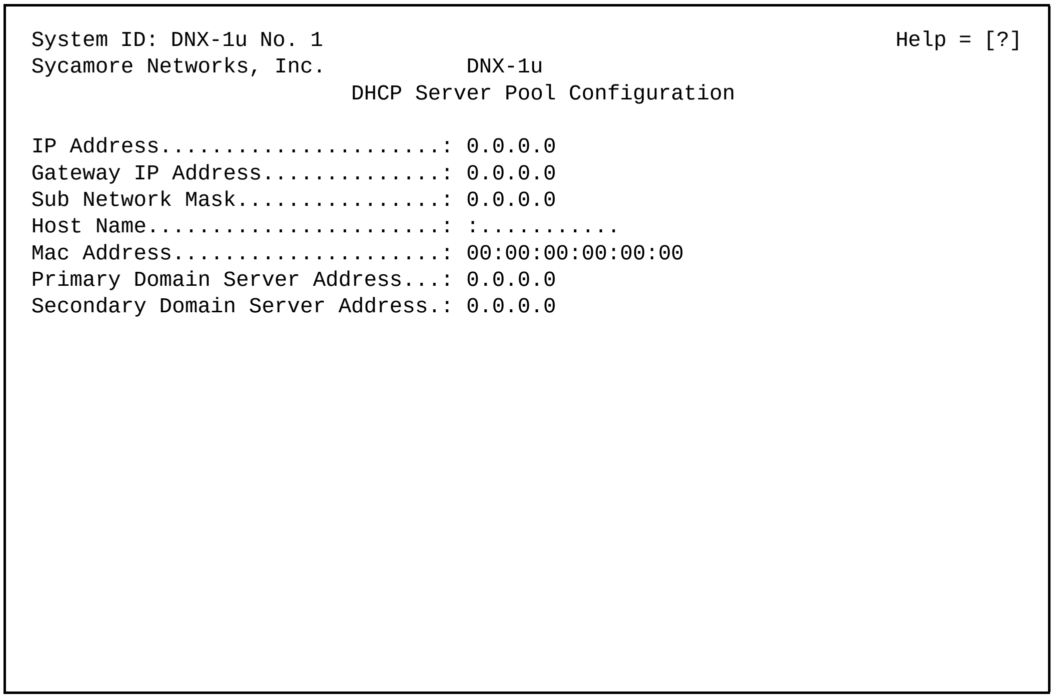

```
System ID: DNX-1u No. 1                                             Help = [?]
Sycamore Networks, Inc.           DNX-1u
                         DHCP Server Pool Configuration

IP Address......................: 0.0.0.0
Gateway IP Address..............: 0.0.0.0
Sub Network Mask................: 0.0.0.0
Host Name.......................: :...........
Mac Address.....................: 00:00:00:00:00:00
Primary Domain Server Address...: 0.0.0.0
Secondary Domain Server Address.: 0.0.0.0
```

4. Modify the selected field(s). For information on these fields, refer to the following section *Field Descriptions*.
5. After the DHCP information is configured, press **X** to exit the screen.

   A message is displayed asking if you want to update the configuration.
6. Press **Y**.

   The selected DHCP information is configured.

Note: *All Mandatory fields must be completed. Any missing or incorrect information will result in an error message indicating which field is missing information. Press any key to return to the DHCP Server Static Configuration screen. You will need to re-select the network and re-enter the correct information.*

Field Descriptions

Table 5-24 lists the field descriptions to set up a DHCP Static configuration.

Table 5-24: *DHCP Server Pool Configuration Field Descriptions (Static)*

Field	Description
IP Address: *(text field)*	Specifies the static IP address within the pool in “dotted decimal notation”. When a node’s Ethernet MAC address match is found, the rest of the values in the matching entry are assigned to the client. The range is *1.1.1.1* to *254.254.254.254*. This is a mandatory field.
Gateway IP Address: *(text field)*	Specifies the Gateway IP address in “dotted decimal notation”. This address is used by DHCP clients to identify the router that provides access to addresses that are NOT part of the local network. This is a mandatory field.
Sub Network Mask: *(text field)*	Specifies the subnet mask in “dotted decimal notation”. The range is *0.0.0.0* to *255.255.255.255*. This is a mandatory field.
Host Name: *(text field)*	Identifies the host name, up to 14 alphanumeric characters. This is an optional field.
MAC Address: *(text field)*	Specifies the MAC address of the interfacing equipment. The DHCP client’s MAC address (physical address of the Ethernet card) is used as the search criteria to find the assigned IP information. This is a mandatory field.
Primary Domain Server Address: *(text field)*	Specifies the Primary Domain Server Address in “dotted decimal notation”. The DHCP client uses this address as the primary DNS server to resolve host names into IP addresses. The range is *1.1.1.1* to *254.254.254.254*.
Secondary Domain Server Address: *(text field)*	Specifies the Secondary Domain Server Address in “dotted decimal notation”. The DHCP client uses this address as the secondary DNS server to resolve host names into IP addresses. The range is *1.1.1.1* to *254.254.254.254*.

DHCP Statistics

The DHCP Statistics Menu allows you to view statistics for the server pool and unused IP statistics.

Navigation:
DNX-1u Main Menu ↓ Configuration ↓ Subsystem Profile ↓ Select ROUTER ↓ **[Enter]** Subsystem Cfg ↓ DHCP Server ↓ DHCP Statistics

Viewing DHCP Statistics

To view DHCP Statistics, follow the procedure below.

1. From the DNX-1u Main Menu, click on **Configuration**, **Subsystem Profile**, **ROUTER** and then on **DHCP Server**.

   The DHCP Main Menu is displayed.

2. Select *DHCP Statistics* and press **Enter**.

   The DHCP Statistics Menu is displayed.

Figure 5-58: *DHCP Statistics Menu*

```
System ID: DNX-1u No. 1                                        Help = [?]
Sycamore Networks, Inc.           DNX-1u




                            Pool Statistics
                            Used IP Statistics
```

3. From this menu you can view DHCP Pool Statistics or Used IP Statistics. Refer to the following procedures below.

Viewing DHCP Pool Statistics

To view DHCP Pool Statistics, follow the procedure below.

1. From the DHCP Statistics Menu, click on **Pool Statistics**.

   The DHCP Pool Statistics screen is displayed.

Figure 5-59: *DHCP Pool Statistics Menu*

```
System ID: DNX-1u No. 1                                          Help = [?]
Sycamore Networks, Inc.           DNX-1u
                              DHCP Pool Statistics

Network Name     1st Local Address

MyNet #1         10.52.244.130
MyNet #2         10.52.244.137
```

2. Move your cursor to the network name you want to view statistics and press **Enter**.

   The DHCP Pool Statistics screen is displayed.

Figure 5-60: *DHCP Pool Statistics Display Screen*

```
System ID: DNX-1u No. 1                                          Help = [?]
Sycamore Networks, Inc.           DNX-1u

Network Name.........: MyNet #1
Total................: 0008
Available............: 0007
```

3. For information on these fields, refer to the following section *Field Descriptions*.

Field Descriptions

Table 5-25 lists the field descriptions for viewing DHCP Pool Statistics.

Table 5-25: *DHCP Pool Statistics Field Descriptions*

Field	Description
Network Name: *(display field)*	Displays the name of the selected network.
Total: *(display field)*	Displays the total number of addresses in the Dynamic Address Pool.
Available: *(display field)*	Displays the number of remaining available addresses in the Dynamic Address Pool.

Viewing DHCP Used IP Statistics

To view DHCP Used IP Statistics, follow the procedure below.

1. From the DHCP Statistics Menu, click on **Used IP Statistics**.

   The DHCP Used IP Statistics screen is displayed.

Figure 5-61: *DHCP Used IP Statistics Display*

```
System ID: DNX-1u No. 1                                          Help = [?]
Sycamore Networks, Inc.           DNX-1u
                            DHCP Used IP Statistics


IP Address         Lease Remaining(Sec)    MAC Address         Host Name
10.52.244.137       2140                   00:54:20:FF:AA:AA   ClaraNet
10.52.244.138       20145                  00:54:20:AB:01:01   AnneDroyd
10.52.244.139       36                     00:54:20:02:34:99   IzziUpp
10.52.244.140       1001                   00:54:20:02:34:99   RichardGear









                                       Page 1 of 1
                                       Page next/prev = ['+'/'-']
```

2. For information on these fields, refer to the following section *Field Descriptions*.

Field Descriptions

Table 5-26 lists the field descriptions for viewing DHCP Used IP Statistics

Table 5-26: *DHCP Used IP Statistics Field Descriptions*

Field	Description
IP Address: *(display field)*	Displays the IP addresses currently being used.
Lease Remaining (Sec.): *(display field)*	Displays the number of seconds remaining on the lease. ***Note:*** *This is not a dynamic display. As a result, the lease times do not decrement. Since the time remaining on leases is updated only upon entering the menu, updates can only be obtained by exiting the display and re-entering.*
MAC Address: *(display field)*	Displays the number of remaining available addresses in the Dynamic Address Pool.
Host Name: *(display field)*	Displays the host name configured using the DHCP Server Pool Configuration Menu.

DHCP Options

The DHCP Options Menu allows you to configure the Dynamic Host Configuration Protocol (DHCP) DHCP as well as other configuration settings.

Navigation:
DNX-1u Main Menu ↓ Configuration ↓ Subsystem Profile ↓ Select ROUTER ↓ **[Enter]** Subsystem Cfg ↓ DHCP Server ↓ DHCP Options

Configuring DHCP Options

To configure DHCP options, follow the procedure below.

1. From the DNX-1u Main Menu, click on **Configuration**, **Subsystem Profile**, **ROUTER** and then on **DHCP Server**.

   The DHCP Main Menu is displayed.

2. Select **DHCP Options** and press **Enter**.

   The DHCP Options screen is displayed.

Figure 5-62: *DHCP Options Screen*

```
System ID: DNX-1u No. 1                                          Help = [?]
Sycamore Networks, Inc.           DNX-1u


DHCP................: YES

Netbios Node Type....: Disabled
Netbios Scope........: Disable
Netbios Name Server..: Disable
```

3. From this screen you can enable DHCP as well as configure several option settings. For information on these fields, refer to the following section *Field Descriptions*.
4. After the DHCP information is configured, press **X** to exit the screen.

   A message is displayed asking if you want to update the configuration.
5. Press **Y**.

   The selected DHCP information is configured.

Field Descriptions

Table 5-27 lists the field descriptions for configuring DHCP options.

Table 5-27: *DHCP Options Display Field Descriptions*

Field	Description
DHCP: *(option field)*	Select *Yes* to enable the DHCP Server. Otherwise, DHCP Dynamic and Static Configuration is not possible.
Netbios Node Type: *(display field)*	Sets the type of Netbios Node. Choose from one of the following: • *Disabled*: Disables the Netbios Node. • *B-Node*: The most basic mode of operation. Name registration and discovery algorithms use broadcast messages by querying every system for name resolution. This method does have a disadvantage, it can cause congestion on the network. • *P-Node*: (Point-to-Point Node) This is used when the network administrator wants to cut the amount of broadcast activity of NetBios operations that would occur in B-Mode. P-Nodes use only UDP messaging and TCP sessions directed at a centralized NetBios Name Server (NBNS) or WINs Server. Broadcast UDP/TCP is not supported in a P-Node. • *M-Node*: (Mixed Node) M-Nodes are of type P that have been given some B-type characteristics. M-nodes use broadcast and unicast UDP messaging. An M-node must have the services of a NetBios Name Server, using NetBios Distributed Datagram server. Pure B and P Nodes do not interact; the type B and type M-Nodes can be mixed only on a local broadcast area. **CAUTION** DO NOT use B and M node types in an Internet application. • *H-Node*: (Hybrid Node) P-node is tried first, then switches over to B-Node operation.
Netbios Scope: *(option field)*	Enables you to *Enable* or *Disable* NetBios Scope, as well as assign a name to the population of computers on the network. See the Enable and Configure NetBios Scope procedure on the following page.
Netbios Name Server: *(option field)*	Enables you to *Enable* or *Disable* the NetBios Name Server and assign IP addresses to the primary and secondary WINs (Windows Internet Naming Service) servers.

DHCP/Bootp Relay Configuration

DHCP provides the framework for passing configuration information to hosts on the network. It is based on the Bootstrap Protocol (BOOTP) and also adds the capability of automatic allocation of reusable network addresses and configuration options.

Navigation:
DNX-1u Main Menu ↓ Configuration ↓ Subsystem Profile ↓ Select ROUTER ↓ **[Enter]** Subsystem Cfg ↓ DHCP/Bootp Relay

Setting Up a DHCP/Bootp Relay Configuration

To set up a DHCP/Bootp Relay configuration, follow the procedure below.

1. From the DNX-1u Main Menu, click on **Configuration**, **Subsystem Profile**, **ROUTER** and then on **DHCP Server**.

   The DHCP Main Menu is displayed.

2. Select *DHCP/Bootp Relay* and press **Enter**.

   The DHCP/Bootp Relay Configuration screen is displayed.

Figure 5-63: *DHCP/Bootp Relay Configuration Screen*

```
System ID: DNX-1u No. 1                                          Help = [?]
Sycamore Networks, Inc.           DNX-1u
                        DHCP/Bootp Relay Configuration

Enabled:..........: No
Maximum Hops......: 4

Server address      Logical port (required only if Server address is broadcast)
--------------       ------------
0.0.0.0              0
0.0.0.0              0
0.0.0.0              0
0.0.0.0              0
```

3. Modify the selected field(s). For information on these fields, refer to the following section *Field Descriptions*.
4. After the DHCP information is configured, press **X** to exit the screen.

   A message is displayed asking if you want to update the configuration.
5. Press **Y**.

   The selected DHCP information is configured.

Field Descriptions

Table 5-28 lists the field descriptions for setting up a DHCP/Bootp Relay.

Table 5-28: *DHCP/BOOTP Relay Configuration Field Descriptions*

Field	Description
Enabled: *(text field)*	Select *Yes* to enable DHCP/Bootp. When DHCP/Bootp is enabled, the Router acts as a relay agent that passes DHCP messages (Ethernet addresses of devices) between DHCP clients and DHCP servers. A DHCP client is an Internet host using DHCP to obtain configuration parameters such as a network address. The DHCP server is the Internet host that returns configuration parameters to DHCP clients.
Maximum Hops: *(option field)*	Sets the maximum number of hops the router will make to find a particular server, between *0* and *16* hops. The default value is *4*.
Server Address: (*text field)*	Identifies the server on which DHCP packets will be relayed. Up to four addresses can be configured. If the server address is broadcast (255.255.255.255), you must also specify a Logical port.
Logical port: (*option field)*	Identifies the Logical port on which DHCP packets will be relayed. The range is *0* to *65535*.

High-Speed Synchronous Data Subsystem

The High-Speed Synchronous Data (HSSD) Subsystem supports the interconnection of two independent Nx56/64 kbps serial data ports to either T1/E1 transport facilities or the router engine using the DNX-1u resident TDM Switch Fabric. This section will guide you through configuring the High-Speed Synchronous Data Subsystem.

Navigation:
DNX-1u Main Menu ↓ Configuration ↓ Subsystem Profile ↓ Select SYNC ↓ **[Enter]** Subsystem Cfg

Configuring the High-Speed Synchronous Data Subsystem

Only DS0-level data can be cross-connected to HSSD ports. The cross-connected T1/E1 port must be configured for 1-0 cross-connect mode. Both 1-1 Framed and 1-1 Unframed Modes cross-connect data at the T1/E1 level and cannot be cross-connected to a HSSD port.

To configure the HSSD Subsystem, follow the procedure below.

1. From the DNX-1u Main Menu, click on **Configuration**, **Subsystem Profile** and then on **SYNC**.

   The SYNC Configuration screen is displayed.

Figure 5-64: *SYNC Configuration Screen*

```
System ID: DNX-1u No. 1                                          Help = [?]
Sycamore Networks, Inc.           DNX-1u

                              SYNC Configuration


                                                                 Enable
                                                                 Loops
# Name         Type  Rate  xN Timing  Data   Clock  DSR   DCD   CTS/I V54 DTE
- ------------ ----- -------- ------- ------ ------ ----- ----- ----- --- ---
1 Port Name    232   NoConn   Int     Normal Normal F-On  F-On  F-Off No  N/A
2 Port Name    Out of Service









[C]opy cfg to all
```

2. To configure parameters for an individual port, move the cursor to the port to be configured and press **Enter**.

   The SYNC Port Configuration screen is displayed

Figure 5-65: *SYNC Port Configuration Screen*

```
System ID: DNX-1u No. 1                                          Help = [?]
Sycamore Networks, Inc.           DNX-1u

                            SYNC Port Configuration

                   Port Number..............: 1
                   Name.....................: Port Name
                   Status...................: In Service
                   Mode.....................: NxDS0
                   Type.....................: EIA-232
                   Data.....................: Normal
                   Clock....................: Normal
                   V.54 Network Loop........: Disabled
                   Disable TX FIFO Errors...: Yes
                   Disable Clock Edge Errors: Yes
                   Timing...................: Int
                   DSR......................: Force On
                   DCD......................: Force On
                   CTS......................: Force Off
```

3. Modify the selected field(s). For information on these fields, refer to the following section *Field Descriptions*.

4. This screen will display different options, depending on the type selected. Refer to the next section for various configuration options.

5. After the port information is configured, press **X** to exit the screen.

   A message is displayed asking if you want to update the configuration.

Note: *If both ports will be configured the same, you can use the copy configuration feature (**[C]**opy cfg to all), by placing your cursor on the port to be copied and pressing **C**.*

6. Press **Y**.

   The selected port information is configured.

Port Configuration - EIA-232, EIA-530, EIA-530A, EIA-422 or ITU-V.35

When the type is set to *EIA-232, EIA-530*, *EIA-530A*, *EIA-422* or *ITU-V.35*, the following screen is displayed.

Figure 5-66: *SYNC Port Configuration Screen (EIA-232, EIA-530, EIA-530A, EIA-422 or ITU-V.35)*

```
System ID: DNX-1u No. 1                                          Help = [?]
Sycamore Networks, Inc.           DNX-1u

                            SYNC Port Configuration

                   Port Number..............: 1
                   Name.....................: Port Name
                   Status...................: In Service
                   Mode.....................: NxDS0
                   Type.....................: ITU-V.35
                   Data.....................: Normal
                   Clock....................: Normal
                   V.54 Network Loop........: Disabled
                   Disable TX FIFO Errors...: Yes
                   Disable Clock Edge Errors: Yes
                   Timing...................: Int
                   DSR......................: Force On
                   DCD......................: Force On
                   CTS......................: Force Off
```

Note: *In this case, the control signal operations DSR, DCD and CTS are available.*

Port Configuration - ITU-X.21

When the type is set to *ITU-X.21*, the following screen is displayed.

Figure 5-67: *SYNC Port Configuration Screen (ITU-X.21)*

```
System ID: DNX-1u No. 1                                          Help = [?]
Sycamore Networks, Inc.           DNX-1u


                          SYNC Port Configuration

                    Port Number..............: 1
                    Name.....................: Port Name
                    Status...................: In Service
                    Mode.....................: NxDS0
                    Type.....................: ITU-X.21
                    Data.....................: Normal
                    Clock....................: Normal
                    V.54 Network Loop........: Disabled
                    Disable TX FIFO Errors...: Yes
                    Disable Clock Edge Errors: Yes
                    Timing...................: Int
                    Indication...............: Force Off
```

Note: *The ITU-X.21 option is significantly different from other protocols. Selecting this option forces removal of the DSR, DCD and CTS options, and replaces them with the Indication option.*

Field Descriptions

Table 5-29 lists the field descriptions to configure HSSD ports.

Table 5-29: *HSSD Port Configuration Field Descriptions*

Field	Description
Port Number: *(display field)*	Displays the port number (*1* or *2*) of the port being configured.
Name: *(text field)*	Identifies the name of the HSSD port, up to 20 alphanumeric characters. It may be beneficial to use circuit numbers to name the ports. ***Note:*** *Do not use a dollar sign ($) as part of a port name. Using a dollar sign ($) may cause the port name to be truncated in the Event Log.*
Status: *(option field)*	Sets the status of the port, either *In Service* (port is active) or *Out Of Service* (port is inactive).
Mode: *(option field)*	Sets the speed of the port as either *NxDS0*, *8 kbps XOT*, or *16 kbps XOT*. ***Note:*** *XOT modes are applicable to EIA-232 and V.35 port types only.*

Table 5-29: *HSSD Port Configuration Field Descriptions (Continued)*

Field	Description
Type: *(option field)*	Specifies the type of interface the High Speed port supports: • *EIA-232* - Common physical layer interface standard that supports unbalanced circuits at signal speeds of up to 64 kbps. Formerly known as RS-232. • *EIA-530* - Refers to two electrical implementations of EIA/TIA-449: RS-422 (for balanced transmission) and RS-423 (for unbalanced transmission). Referred to collectively as EIA-530. • *EIA-530A* - Common physical layer interface standard that supports unbalanced circuits at signal speeds of up to 64 kbps. Formerly known as RS-232. • *EIA-422* - Common physical layer interface standard that supports balanced electrical implementation of EIA/TIA-449 for high-speed data transmission. Formerly known as RS-422. • *ITU-V.35* - ITU-T standard describing a synchronous, physical layer protocol used for communications between a network access device and a packet network. V.35 is most commonly used in the United States and in Europe, and is recommended for speeds up to 48 kbps. • *ITU-X.21* - ITU-T standard for serial communications over synchronous digital lines. The X.21 protocol is used primarily in Europe and Japan. ***Note:*** *If you are using the XOT/LAPB feature, you should only select either the* ***EIA-232*** *interface or the* ***ITU-V.35*** *interface. The XOT/LAPB feature will not function if one of the other interfaces is selected.*
Data: *(option field)*	Specifies the data polarity of the port, and applies to both the transmit or receive data paths, either *Normal* or *Invert*.
Clock: *(option field)*	Sets the polarity of the receive clock, either *Normal* or *Invert*. Initially select *Normal*. If frequent errors occur at the port, select *Invert* and check performance.
V.54 Network Loop: *(option field)*	Determines whether or not the module should respond to V.54 loop diagnostic codes received from the network supplier. Select *Enabled* unless the commands are to be passed to another High Speed device.
Disable TX FIFO Errors: *(option field)*	Allows you to enable or disable the counting of TX FIFO errors. When one of these errors is disabled, the corresponding TX/FIFO status on the Exposed Statistics screen for the Synchronous Diagnostics will indicate “Disbl” and the Error Seconds field will show “0” (zero). When changing from enabled to disabled (configuring Disable...Errors to “yes”), the corresponding error second count is reset to 0 (zero). The choices are *Yes* to suppress TX FIFO Error reporting or *No* to allow reporting. ***Note:*** *The default setting is Yes (reporting suppressed).*
Disable Clock Edge Errors: *(option field)*	Allows you to enable or disable the counting of Clock Edge errors. When one of these errors is disabled, the corresponding Clock Edge status on the Exposed Statistics screen for the Synchronous Diagnostics will indicate “Disbl” and the Error Seconds field will show “0” (zero). When changing from enabled to disabled (configuring Disable...Errors to “yes”), the corresponding error second count is reset to 0 (zero). The choices are *Yes* to suppress Clock Edge Error reporting or *No* to allow reporting. ***Note:*** *The default setting is Yes (reporting suppressed).*

Table 5-29: *HSSD Port Configuration Field Descriptions (Continued)*

Field	Description
Timing: *(option field)*	Sets the source of the port's bit rate clock as either Internal, Internal/External, or External. See descriptions below for details: • *Int* - Internal Timing Mode. The HSSD port provides the DTE with both the transmit and receive timing information necessary to clock the data in and out at both ends. The only timing reference for this application is derived from the DNX-1u unit-level timing that is ultimately managed by the internal processor. Figure 5-68 shows an example of Internal Timing. **Figure 5-68:** *Internal Timing for a typical DTE application.* 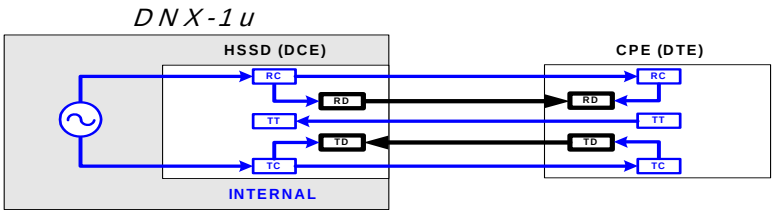
	• *Int/Ext* - Internal/External Timing Mode. The HSSD port provides the DTE with receive timing information (DNX-1u unit-level timing) necessary to clock the receive data at both ends; whereas the DTE provides the HSSD port with terminal timing information necessary to clock the transmit data at both ends. Although some DTE devices merely “turn-around” the DCE clock, others may provide their own references. Since there are separate timing sources for this application, both the DNX-1u and CPE sources need to be referenced back to the same clock, such as a Stratum-level reference, or slips will occur. Figure 5-69 shows an example of Internal/External Timing. **Figure 5-69:** *Internal/External Timing for a typical DTE application.* 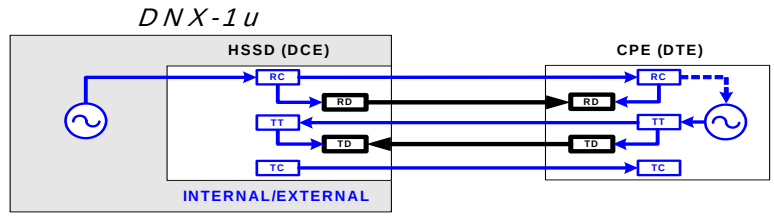

Table 5-29: *HSSD Port Configuration Field Descriptions (Continued)*

Field	Description
Timing: *(option field)* (continued)	• *Ext* - External Timing Mode. The CPE (DCE in this case) provides the HSSD port with the terminal timing information necessary using a cross-over cable which is necessary to clock both the transmit and receive data at both ends. The timing reference for this application is derived from the CPE source, however, the cross-connect fabric is still managed by the DNX-1u timing reference. Therefore, both the DNX-1u and CPE sources need to be tied back to the "same" clock; for example, this port is selected as a DNX-1u unit reference or they are both Stratum-traceable references) or slips will occur. Figure 5-70 shows an example of External Timing. **Figure 5-70:** *External Timing and Data Relationship for a typical DTE application* 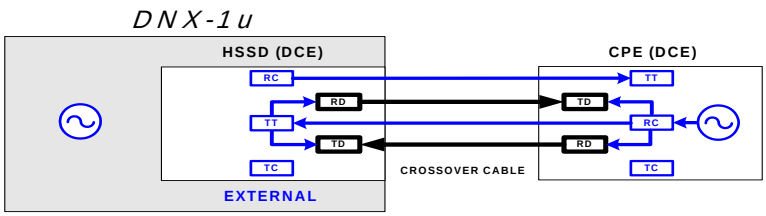
DSR: *(option field)*	Sets the Data Set Ready (DSR) method used on this port. DSR is not applicable for ITU-X.21. DSR settings are: • *Force Off* - DSR signalling is off. • *Force On* - DSR signalling is on. • *Track DTR* - Tracks Data Terminal Ready (DTR) signal before transmitting data to the DTE.
DCD: *(option field)*	Sets the Data Carrier Detect (DCD) method used on this port. DCD is not applicable for ITU-X.21. DCD settings are: • *Force Off* - DCD is off. • *Force On* - DCD is on. • *Track RTS* - Asserts Request to Send (RTS) each time data needs to be transmitted and drops RTS at some point after data transmission begins. • *Drop Carrier on Link Failure* - Drops DCD in response to a Carrier link fault.
CTS: *(option field)*	Sets the Clear to Send (CTS) control signal configuration used on this port. DCD is not applicable for ITU-X.21. The CTS Settings are: • *Force Off* - CTS method is off. • *Force On* - CTS method is on. • *Track RTS* - Asserts Request to Send (RTS) each time data needs to be transmitted and drops RTS at some point after data transmission begins.
Indication: *(X.21 option field)*	This field is only present when the type selected is *ITU-X.21*. The HSSD port (DCE) indicates to the DTE the type of data sent on the Receive line. The choices are: • *Force Off* - Indication method is off. • *Force On* - Indication method is on. • *Track Control* - Asserts Indication each time data needs to be transmitted and drops Indication at some point after data transmission begins.

Low-Speed Asynchronous Data Subsystem

The Low-Speed Asynchronous Data (LSAD) Subsystem supports the interconnection of six independent serial data DCE ports (or DTE ports when crossover cable is used) to the DNX-1u. These six RJ-45F Asynchronous Data ports are configured for Data Terminal Equipment (DTE) operation and are designed to be used to access and control remote craft ports on external third-party systems and devices. This section will guide you through configuring the LSAD Subsystem.

Navigation:
DNX-1u Main Menu ↓ Configuration ↓ Subsystem Profile ↓ Select ASYN ↓ **[Enter]** Subsystem Cfg

Configuring the Low-Speed Asynchronous Data Subsystem

To configure the LSAD Subsystem, follow the procedure below.

1. From the DNX-1u Main Menu, click on **Configuration**, **Subsystem Profile** and then on **ASYN**.

   The Asynchronous Serial Port screen is displayed.

Figure 5-71: *Asynchronous Serial Port Configuration Menu*

```
System ID:                                                          Help = [?]
Sycamore Networks, Inc.           DNX-1u
                          Asynchronous Serial Port


                                                Line  TCP   Time Destination
# Port Name    Baud  Stop Data Parity Protocol Term  Port  Out  IP Address
- ---------    ----  ---- ---- ------ -------- ----  ----  ---- --------------
1 Async-01     9600  1    8    None   TermSer  CR/LF 4001  10
2 Async-02     9600  1    8    Odd    TermSer  CR    4002  10
3 Async-03     2400  1    8    None   TermSer  CR/LF 4003  10
4 Async-04     9600  1    8    None   Transpar       4004  10
5 Async-05     1200  1    8    Odd    AutoInit       4005       192.100.200.25
6 Async-06     38400 1    8    None   PPP




               Must exit for changes to take effect


[V]iew Port Status  [C]opy Config to All
```

2. To configure parameters for an individual port, move the cursor to the port to be configured and press **Enter**. The Asynchronous Serial Port Configuration menu is displayed.

Figure 5-72: *Asynchronous Serial Port Configuration Menu*

```
System ID:                                                        Help = [?]
Sycamore Networks, Inc.           DNX-1u
                     Asynchronous Serial Port Configuration


              Port Number.........................: 4
              Port Name...........................: Async-05
              Service State.......................: In Service
              Baud Rate...........................: 38400
              Stop Bits...........................: 1
              Data Bits...........................: 8
              Parity..............................: None
              Protocol............................: Terminal Server
              IP Address. (For Async Port)........: 0.0.0.0
              TCP Port....(For Async Port)........: 4004
              Timeout (in Minutes) 0=disabled.....: 10
              Line Termination....................: CR/LF
```

3. Modify the selected field(s). For information on these fields, refer to the following section *Field Descriptions*.
4. This screen will display different options, depending on the type selected.
5. After the port information is configured, press **X** to exit the screen.

   A message is displayed asking if you want to update the configuration.
6. Press **Y**.

   The selected port information is configured.

Field Descriptions

Table 5-30 lists the field descriptions to configure LSAD ports.

Table 5-30: *Asynchronous Serial Port Configuration Menu Field Descriptions*

Field	Description
Port Number: *(display field)*	Displays the port number to be configured.
Port Name: *(text field)*	Specifies the name of the LSAD port, up to 20 alphanumeric characters. It may be beneficial to use circuit numbers to name the ports. ***Note:*** *Do not use a dollar sign ($) as part of a port name. Using a dollar sign ($) may cause the port name to be truncated in the Event Log.*
Service State: *(option field)*	Sets the status of the port. The service state will either be *In Service* (port is active) or *Out Of Service* (port is inactive).
Baud Rate: *(option field)*	Specifies the baud rate for the serial port. The available data rates are: *1200*, *2400*, *4800*, *9600*, *19200* or *38400* baud. The default is *9600* baud.
Stop Bits: *(option field)*	Indicates the number of Stop Bits to be used on the interface, either *1*, *1.5* or *2*. The default is *1*.
Data Bits: *(option field)*	Indicates the number of Data Bits to be used on the interface, either *7* or *8.* The default is *8*.
Parity: *(option field)*	Specifies the type of Parity to be used on the interface, either *None*, *Odd* or *Even*. The default is *None*.
Protocol: *(option field)*	Specifies the type of protocol used on this serial interface: • *Terminal Server* - For asynchronous serial interfaces. Provides Telnet sessions to external device. Also requires user to configure an available TCP Port. • *PPP* (Point to Point Protocol) - Requires a user to configure an IP Address associated with this port. • *SLIP* (Serial Line IP) - Requires a user to configure an IP Address associated with this port. • *Transparent Server* (Transparent Protocol) - Used to pass data, regardless of the format. Essentially, everything is passed unchanged, without the addition of control signals. • *Auto Initiate* - Allows terminal server-to-terminal server connections to be established automatically by client devices (connected to the DNX-1u Asynchronous Serial Ports) to remote-end devices. The default is *Terminal Server.* ***Note:*** *When changing from a Terminal Server protocol to another protocol, an event message is generated indicating the Terminal Server failed an accept. This error message indicates the Terminal Server socket was terminated it does not indicate a problem with the Terminal Server.*
IP Address (for Destination): *(text field)*	Specifies the IP address of the remote-end (destination) device. ***Note:*** *Only applicable for Auto Initiate protocol.*
IP Address (for Async Port): *(text field)*	Specifies the IP address of the Async port. ***Note:*** *Only applicable for Terminal Server protocol.*
TCP Port: *(text field)*	Determines the TCP Port to be used on this interface. Values are from *0* to *65535*. ***Note:*** *Only applicable for Auto Initiate and Terminal Server protocols.* ***Note:*** *If a value of less than 0 is entered, the system will change this value to 0. If a value greater than 65535 is entered, the system change this value to 65535.*

Table 5-30: *Asynchronous Serial Port Configuration Menu Field Descriptions (Continued)*

Field	Description
Timeout (in Minutes): *(text field)*	Specifies the Configuration timer that controls the time between when traffic loss is detected on an auto-initiated connection and when the connection is terminated and restored. The range is *0* to *9999* minutes. The default is *10* minutes. If the value is set to *0* this feature is disabled. Timeouts apply to inactivity on socket reads. If socket reads fail for the time specified, the socket will close and then try to reopen after a few seconds. ***Note:*** *This field is only applicable for the following protocols: Terminal Server, Transparent Server, and Auto-Initiate.* ***Note:*** *If a value of less than 0 is entered, the system will change this value to 0. If a value greater than 9999 is entered, the system change this value to 9999.* ***Note:*** *The Terminal Server and Transparent Server protocols provide a timeout parameter, which is the amount of time the Telnet server detects a loss of traffic, after which it should close the connection. The DNX-1u application will timeout after 10 minutes of inactivity. In some instances, the DNX-1u will have a timeout period longer than 10 minutes. For example, if one DNX-1u unit has the Terminal Server set to timeout after 3 minutes of inactivity, when accessing another DNX-1u unit using Telnet or Terminal Server and not entering any commands for a period of 10 minutes, once the DNX-1u application times out, the timer for the Terminal Server is started. This gave this connection a timeout of 13 minutes.*
Line Termination: *(option field)*	Specifies the line termination character setting line: • *CR* - Passes carriage return to the Remote System. • *LF* - Passes a line feed to the Remote System. • *CR/LF* - Passes both carriage return and line feed to the Remote System. The default is *CR/LF*. ***Note:*** *Only applicable for Terminal Server protocol.*
AUTHENTICATION PARAMETERS These parameters are used in serial link and dialup router applications running PPP and PPP/MP where increased security is required. They are used to ensure the person or device requesting access to the network is a valid client. The name and password parameters must be the same at each end. Authentication parameters can be used only with PPP/MP connections.	
Username: *(text field)*	Specifies a user name, up to 18 alphanumeric characters, used by PPP/MP during the link setup. The DNX-1u sends this field's content as part of the login sequence, as part of the PAP or CHAP negotiation.
Password/secret: *(text field)*	Specifies an authentication password, up to 18 alphanumeric characters used by PPP/MP during the link setup. The DNX-1u sends this field's content as part of the login sequence, as part of the PAP or CHAP negotiation.
Authentication required: *(option field)*	Determines if the DNX-1u must log into a remote device before an asynchronous serial connection can be made. The authentication is performed using an in-band protocol negotiation, such as CHAP or PAP, instead of ASCII text, such as a terminal login. If this parameter is set to Yes, the DNX-1u router uses the selected authentication protocol to verify the person/device requesting access to the network is given valid access. ***Note:*** *Only applicable for PPP protocol.* The DNX-1u router ensures the proper name and password are entered. If the name and password do not match what is programmed, access to the remote network will be denied. If authentication is not required (parameter set to No), the DNX-1u router will not check names and passwords.

Table 5-30: *Asynchronous Serial Port Configuration Menu Field Descriptions (Continued)*

Field	Description
Authentication protocol: *(option field)*	Selects an authentication protocol, if required the for link. The choices are: • *CHAP* (Challenge Handshake Authentication Protocol, IETF RFC1994) uses encrypted passwords and allows the authentication to be re-certified later in the session to protect against highjacking attacks on the session. *CHAP* is the default setting. • *PAP* (Password Authentication Protocol, IETF RFC1334) sends passwords "in the clear" and doesn't protect against session highjacking or brute force hacking, such as attempting all combinations of a password to find the one that works. ***Note:*** *Only applicable for PPP protocol.* ***Note:*** *Using the same protocol at both ends is recommended; however, it is not necessary.*

Terminal Server Mode

Terminal Server Mode simulates standard Terminal Server communications, as illustrated in Figure 5-73.

Figure 5-73: *Example - Terminal Server Mode*

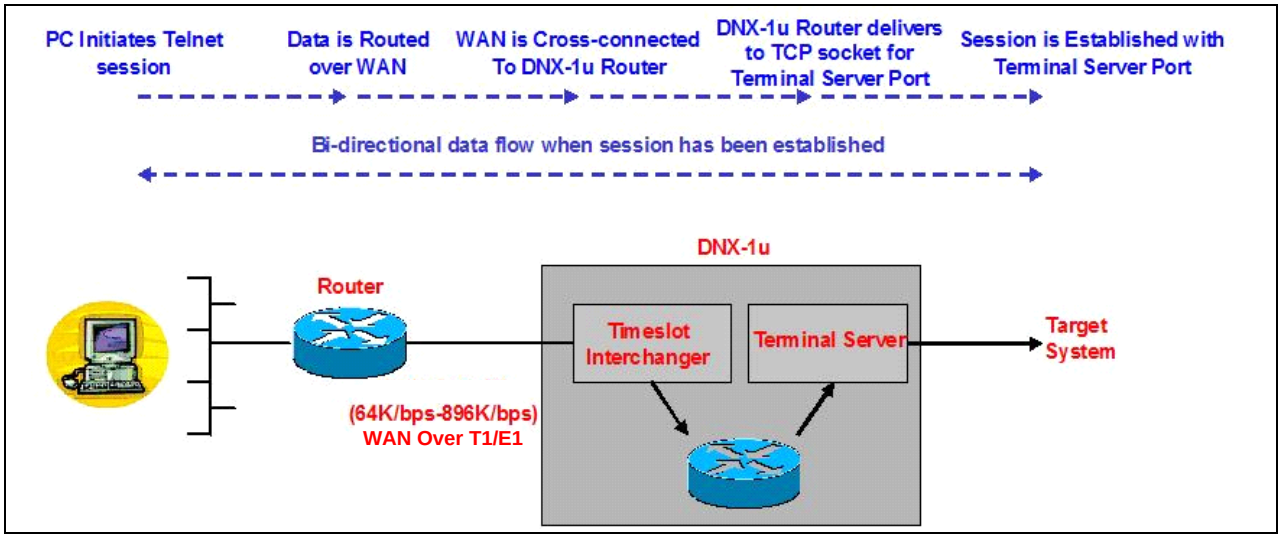

Reverse Telnet

Reverse Telnet allows you to assign a unique IP address to a Terminal Server port that corresponds to the configured Transmission Control Protocol (TCP) port number for that port. It allows RS-232 console (Telnet) access to a network element connected to a DNX-1u Terminal Server port by simply specifying the IP address of the port (device) to initiate the session.

When configuring an Asynchronous port using the Terminal Server Mode, you can assign port number 23 (the well-known Telnet port) as the port number instead of using ports 4000-4999. In addition, you can also assign a specific IP address to the Asynchronous port or use the default value of 0.

Restrictions for this port are the same for an TCP port/IP address pair, they cannot be used for more than one Asynchronous port and if port 23 is selected on an Asynchronous port, the IP address cannot be set to 0.

Any IP address that is assigned to a Terminal Server Asynchronous port must also be assigned to one of the Logical Interfaces or from the Secondary IP Address list.

Note: *This feature is not configurable using the Command Line Interface (CLI).*

Auto-Initiate Mode

Auto-Initiate Mode simulates a point-to-point connection between two DNX-1u Asynchronous ports, as illustrated in Figure 5-74.

Note: *For Asynchronous CHAP and Auto-Initiate protocols, for Release 3.4 a status message "N/A" is displayed. For Release 3.4. FP1 a status message "Not Connected" is displayed.*

Figure 5-74: *Example - Auto-Initiate Mode*

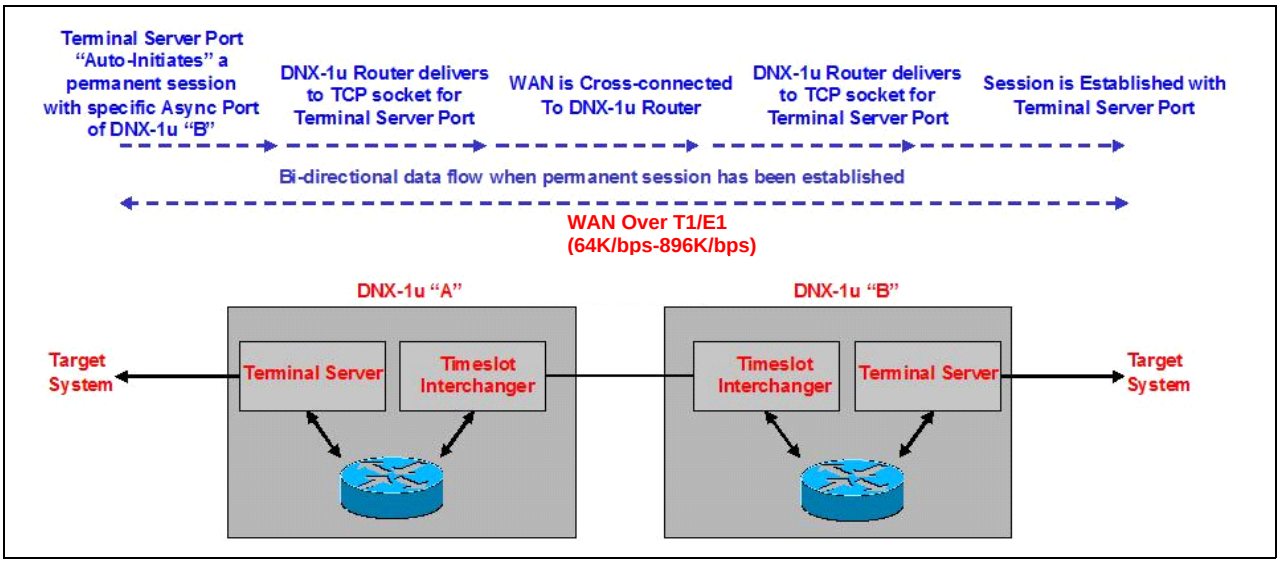

Contact Closures Subsystem

The Contact Closures Subsystem monitors up to 16 bi-state detector inputs (relative to DNX-1u ground reference) and controls up to six Form-C "dry" contact closure relays or user-defined unit alarm outputs. This section will guide you through configuring the Contact Closures Subsystem.

Navigation:
DNX-1u Main Menu ↓ Configuration ↓ Subsystem Profile ↓ Select CONT ↓ **[Enter]** Subsystem Cfg

Note: *For information on the exact location of contact pinouts, refer to Chapter 14 “Contact Inputs and Outputs” in the DNX-1u Reference Guide (DOC-001-02811).*

Configuring the Contact Closures Subsystem

To configure the Contact Closures Subsystem, follow the procedure below.

1. From the DNX-1u Main Menu, click on **Configuration**, **Subsystem Profile** and then on **CONT**.

   The Contact Closures Configuration screen is displayed.

Figure 5-75: *Contact Closures Configuration Screen*

```
System ID: DNX-1u No. 1                                                Help = [?]
Sycamore Networks, Inc.           DNX-1u
                        Contact Closures Configuration
Contact Outputs:
                Alarm                                   Alarm
#  Name         Activation              #  Name         Activation
-------------------------------------------------------------------------------
A1 ContactOut01 Critical                B1 ContactOut04 Deactivated
A2 ContactOut02 Major                   B2 ContactOut05 Activated
A3 ContactOut03 Minor                   B3 ContactOut06 --

Contact Inputs:

A1 ContactIn01  Low                     B1 ContactIn09  --
A2 ContactIn02  High                    B2 ContactIn10  --
A3 ContactIn03  High                    B3 ContactIn11  --
A4 ContactIn04  High                    B4 ContactIn12  --
A5 ContactIn05  High                    B5 ContactIn13  --
A6 ContactIn06  --                      B6 ContactIn14  --
A7 ContactIn07  --                      B7 ContactIn15  --
A8 ContactIn08  --                      B8 ContactIn16  --


'--' indicates Contact is Out of Service
```

2. Move your cursor to a contact input or output you want to configure and press **Enter**.

   The selected Contact Closure input/output screen is displayed.

Figure 5-76: *Contact Closures Configuration Screen (Input Example)*

```
System ID: DNX-1u No. 1                                          Help = [?]
Sycamore Networks, Inc.           DNX-1u
                             Contact Closure Output


Contact ID......: A1
Type............: Input
Name............: ContactIn01
Service Status..: Out of Service
Activation Level: Low
Alarm Type......: Major









[D]efault
```

Figure 5-77: *Contact Closures Configuration Screen (Output Example)*

```
System ID: DNX-1u No. 1                                          Help = [?]
Sycamore Networks, Inc.           DNX-1u
                             Contact Closure Output


Contact ID......: A1
Type............: Output
Name............: ContactOut01
Service Status..: In Service
Alarm Activation: Deactivate









[D]efault
```

3. Modify the selected field(s). For information on these fields, refer to the following section *Field Descriptions*.
4. After the contact closure information is configured, press **X** to exit the screen.

   A message is displayed asking if you want to update the configuration.
5. Press **Y**.

   The selected contact closure information is configured.

Field Descriptions

Table 5-31 lists the field descriptions to configure the Contact Closure Subsystem.

Table 5-31: *Contact Closure Configuration Menu Field Descriptions*

Field	Description
#: *(display field)*	Displays the contact closure ports being configured, from *1* to *8* for a single-ended measurement setup or two digits separated by a dash for a dual (differential) measurement setup.
Type *(option field)*	Specifies the type of Contact Closure Port, either *Input* or *Output*.
Name: *(text field)*	Specifies the name to identify the Contact Closure, up to 12 characters. The default name is *ContactInutXX or ContactOutXX*, where *XX* equals the contact number.
Alarm Activation: *(option field)*	Sets the configured Alarm trigger for the Contact Closure Port. • *Critical* - Enables Critical Alarm for the Output port. • *Major* - Enables Major Alarm for the Output port. • *Minor* - Enables Minor Alarm for the Output port. • *Deactivated* - Enables the Output port as normally opened. • *Activated* - Enables the Output port as normally closed. • *Low* - Enables Low level Alarm for the Input port. • *High* - Enables High level Alarm for the Input port.
Service Status: *(option field)*	Sets the current status of the Contact Closure as *Out-of-Service* or *In-Service*. The default setting is *Out-of-Service*.

Table 5-32 lists the field descriptions to configure the Contact Closure Subsystem.

Table 5-32: *Specific Contact Closure Configuration Option Field Descriptions*

Field	Description
Contact ID: (display field)	Displays the contact closure ports being configured, from *1* to *8* for a single-ended measurement setup or two digits separated by a dash for a dual (differential) measurement setup.
Type: *(option field)*	Specifies the type of Contact Closure Port, either *Input* or *Output*.
Name: *(text field)*	Specifies the name to identify the Contact Closure, up to 12 characters. The default name is *ContactInutXX or ContactOutXX*, where *XX* equals the contact number.
Service Status: *(option field)*	Sets the current status of the Contact Closure as *Out-of-Service* or *In-Service*. The default setting is *Out-of-Service*.

Table 5-32: *Specific Contact Closure Configuration Option Field Descriptions (Continued)*

Field	Description
Alarm Activation: *(Output option field)*	Sets the configured Alarm trigger for the Contact Closure Port. • *Critical* - Enables Critical Alarm for the Output port. • *Major* - Enables Major Alarm for the Output port. • *Minor* - Enables Minor Alarm for the Output port. • *Deactivate* - Enables the Output port as normally opened. • *Activate* - Enables the Output port as normally closed. • *Low* - Enables Low level Alarm for the Input port. • *High* - Enables High level Alarm for the Input port.
Activation Level: *(Input option field)*	Sets the configured Alarm trigger for the Contact Closure Port. • *Critical* - Enables Critical Alarm for the Output port. • *Major* - Enables Major Alarm for the Output port. • *Minor* - Enables Minor Alarm for the Output port. • *Deactivate* - Enables the Output port as normally opened. • *Activate* - Enables the Output port as normally closed. • *Low* - Enables Low level Alarm for the Input port. • *High* - Enables High level Alarm for the Input port.
Alarm Type: *(option field)*	Sets the configured Alarm type for the Contact Closure Port. • *Critical* - Enables Critical Alarm for the Output port. • *Major* - Enables Major Alarm for the Output port. • *Minor* - Enables Minor Alarm for the Output port. • *None* - No alarm level set.

Voltage Measurement Subsystem

The Voltage Measurement Subsystem provides the ability to perform up to eight single-ended or four differential voltage measurements. This section will guide you through configuring the Voltage Measurement Subsystem.

Navigation:

DNX-1u Main Menu
↓
Configuration
↓
Subsystem Profile
↓
Select VOLT
↓
[Enter] Subsystem Cfg

Configuring the Voltage Measurement Subsystem

To configure the Voltage Measurement Subsystem, follow the procedure below.

1. From the DNX-1u Main Menu, click on **Configuration**, **Subsystem Profile** and then on **VOLT**.

   The Voltage Measurements Configuration screen is displayed.

Figure 5-78: *Voltage Measurement Configuration Screen*

```
System ID: DNX-1u No. 1                                                Help = [?]
Sycamore Networks, Inc.           DNX-1u
                       Voltage Measurements Configuration

                    Input   Lower  Upper
#    Name           Type    Limit  Limit
-------------------------------------------------------------------------------
1-2  VoltMeasure1  Dual    -49.0  -46.0
3    VoltMeasure3 ** Out of Service **
4    VoltMeasure4 ** Out of Service **
5    VoltMeasure5 ** Out of Service **
6    VoltMeasure6 ** Out of Service **
7    VoltMeasure7 ** Out of Service **
8    VoltMeasure8 ** Out of Service **
```

2. Move your cursor to the voltage name you want to configure and press **Enter**.

   The selected Voltage Measurement Configuration screen is displayed.

Figure 5-79: *Voltage Measurement Configuration Entry Menu (Single)*

```
System ID: DNX-1u No. 1                                          Help = [?]
Sycamore Networks, Inc.           DNX-1u
                       Voltage Measurement Configuration


Port #........: 3
Input Type....: Single
Name..........: VoltMeasure3
Service Status: In Service
Lower Limit...:  21.0
Upper Limit...:  27.0









[D]efault
```

3. Modify the selected field(s). For information on these fields, refer to the following section *Field Descriptions*.
4. This screen will display different options, depending on the input type selected.
5. After the voltage information is configured, press **X** to exit the screen.

   A message is displayed asking if you want to update the configuration.
6. Press **Y**.

   The selected voltage information is configured.

Note: *Selecting **[D]efault** will set a contact to "Out of Service" and reset Upper and lower limits to zero.*

Field Descriptions

Table 5-33 lists the field descriptions to configure the Voltage Measurement Subsystem.

Table 5-33: *Voltage Measurement Configuration Entry Menu FIeld Descriptions*

Field	Description
Port #: *(display field)*	Displays the voltage measurement channel number(s) being configured. This value is a single digit from *1* to *8* for a single-ended measurement setup or two digits separated by a dash for a dual (differential) measurement setup.
Input Type: *(option field)*	Indicates the type of measurement to be conducted: • *Single*-ended measurement with respect to the system ground • *Dual* - The difference between two single-ended inputs (Differential). The default setting is *Single*.
Name: *(text field)*	Specifies the name used to identify the Voltage Measurement Channel, up to 12 characters. The default name is *VoltMeasureX*, where X equals the channel number.
Service Status: *(option field)*	Sets the current status of the Voltage Measurement Channel as *Out-of-Service* or *In-Service*. The default setting is *Out-of-Service*.
Lower Limit: *(option field)*	Sets the configurable lower limit boundary of the Voltage Measurement Channel. The range is *0 to 60* volts in 0.1 volt increments. The default is *00.0*.
Upper Limit: *(option field)*	Sets the configurable upper limit boundary of the Voltage Measurement Channel. The range is *0 to 60* volts in 0.1 volt increments. The default is *00.0*.

Ambient Temperature Subsystem

The Ambient Temperature Subsystem provides the ability to display the approximate ambient temperature of the immediate DNX-1u environment (based on the internal temperature) and is not configurable.

Transcoder Configuration

The optional DNX-1u Transcoder functionality is used to support applications that require the use of voice compression or subchannels, up to 32 DS0s can be guided to the Transcoder block. The incoming DS0s are compressed to 32 kbps (8 bits compressed to 4 bits).

Note: Transcoder functionality is available only on units containing Transcoder hardware when the ADPCM Transcoder Feature is enabled through a Feature Option Key.

Navigation:
DNX-1u Main Menu ↓ Configuration ↓ Subsystem Profile ↓ Select TCODER ↓ **[Enter]** Subsystem Cfg

Accessing Transcoder Information

To access Transcoder information, follow the procedure below.

1. From the DNX-1u Main Menu, click on **Configuration**, **Subsystem Profile** and then on **TCODER**.

   The Transcoder Configuration screen is displayed.

Figure 5-80: *Transcoder Configuration Screen*

```
System ID: DNX-1u No. 1                                          Help = [?]
Sycamore Networks, Inc.           DNX-1u
                            Transcoder Configuration

Transcoder Compression Rate: 32 kbps (2:1)
```

Power Supply Subsystem

The Power Supply Subsystem uses one or two DC Power Supply Modules to provide DC power for the DNX-1u. A single Power Supply Module is capable of supporting a fully loaded DNX-1u unit and can be installed in either slot. Optionally, a second Power Supply Module can be installed to support automatic redundancy. The fan unit integrated into the DC Power Supply Module is provided to minimize the potential for "hot spots" in the power supply area and is not required to provide general unit cooling. Power supplies are not configurable.

THIS PAGE INTENTIONALLY LEFT BLANK

Section 6
Connection Maps

Introduction

Connection Maps provide the DNX-1u with a flexible tool that helps you manage the changing needs of your network. Up to three Connection Maps can be configured; however, only one (the active map) can be active on the system at any time.

Advantages

There are several advantages to multiple maps:

- Different maps can be made active at specific times, depending upon the needs of your network. For example, a daytime map can be used that contains more voice than data connections and then a nighttime map with more data than voice connections.
- A standby map with a known working configuration that can be activated quickly, should problems arise in the active map.
- Allows you to safely try out new connections or deletions. For example, creating a map with new connections and activate it. If problems occur, you can quickly reactivate the previous map or a standby map, thereby restoring service and minimizing any outages.

Maps can be activated at any time. For more information, see "Activating a Map" on page 6-18.

Connection Maps Menu

The Connection Maps Menu allows you to activate, configure and define Connection Maps as well as Trunk Conditioning information.

Navigation:
DNX-1u Main Menu ↓ Connection Maps

Accessing Connection Map Information

1. From the DNX-1u Main Menu, click on **Connection Maps**.

   The Connection Maps Manager Menu is displayed.

Figure 6-1: *Connection Maps Manager Menu*

```
System ID: default name Unit #1                                    Help = [?]
Sycamore Networks, Inc.           DNX-1u
                              Active Map: Map 01

                          Connection Maps Manager Menu



                           Active Map
                           Map Configuration
                           Map Definition
                           Trunk Conditioning Profile
```

2. Refer to the following sections to:
   - Activate a Map
   - Configure a Map
   - Define a Map
   - Configure a Trunk Conditioning Profile

Active Map

The Active Map is the Connection Map currently in use. When Active Map is selected, the active Connection Map is immediately presented on the Map Configuration Menu. From this menu you can add a new connection, add a subrate connection, delete an existing connection, add a listening connection, or use a filter to view only those connections that meet certain criteria.

Navigation:
DNX-1u Main Menu ↓ Connection Maps ↓ Active Map

Accessing Active Map Information

To access Active Map information, follow the procedure below.

1. From the DNX-1u Main Menu, click on **Connection Maps** and then on **Active Map**.

   The Map Configuration screen is displayed.

Figure 6-2: *Active Connection Map Screen*

```
System ID: default name Unit #1                                        Help = [?]
Sycamore Networks, Inc.           DNX-1u
                   Map Configuration:   Map 01
Note: You must exit this menu in order to update the switch map

Name                Src                   Dest                  Speed    Type
-------------------------------------------------------------------------------
1.T1E1-A.1.1        01.T1E1-A.01.01       01.SYNC--.01.01       0168k D  FDX
1.T1E1-A.2.1        01.T1E1-A.02.01       01.SYNC--.02.01       0448k D  FDX
--
--
--
--
--
--
--
--
--
--

Connection Filter: Not Active

[F]ilter                [A]dd/[D]elete/[L]isten Source/Listen Dest[i]nation
[T]ranscoder  [S]ubrate [H]ome/[E]nd/[N]ext/[P]rev page
```

2. From this screen you can perform various tasks. Refer to the procedure below to:
   - **[A]dd a map**
   - **[D]elete a map**
   - **Modify a map**
   - **Setup Filter Information**
   - **Setup Transcoder Information**
   - **Setup Subrate Information**

Adding an Active Map

To add an Active Map, follow the procedure below.

1. From the Map Configuration screen press **A** to add a map.

   The Add New Connection screen is displayed.

Figure 6-3: *Add New Connection Screen*

```
System ID: default name Unit #1                                    Help = [?]
Sycamore Networks, Inc.           DNX-1u
                          Add New Connection Screen

Connection Name:                       Type...........: Full-Duplex

Src unit.......: 01                    Dest unit.......: 01
Src subsystem..:                       Dest subsystem..:
Src port.......: 01                    Dest port.......: 01
Src Starting Ts: 01                    Dest Starting Ts: 01
Src Trunk Cond.: Profile 1             Dest Trunk Cond.: Profile 1



Speed..........: 56K      (1 TS)
Voice/Data....: Data
Ts Allocation.: Auto-Consecutive





[S]ave connection
```

2. Populate this screen with specific map information. For information on these fields, refer to the following section *Field Descriptions*.
3. When complete press **S** to save this configuration.

Modifying an Active Map

To modify an Active Map, follow the procedure below.

1. From the Map Configuration move your cursor to the map you want to modify and press **Enter**.

   The Change Connection screen is displayed for the selected map.

Figure 6-4: *Change Connection Screen*

```
System ID: default name Unit #1                                        Help = [?]
Sycamore Networks, Inc.           DNX-1u
                           Change Connection Screen

Connection Name: T1E1A_01_1-B_01_1            Type............: Full-Duplex
Src Port.......: 01.T1E1-A.01                 Dest port.......: 01.T1E1-B.01
Src Trunk Cond.: Profile 1                    Dest Trunk Cond.: Profile 1
Speed:           Clear E1 (32 TS)             Data/Voice......: Data
-------------------------------------------------------------------------------

Src Port Time slot assignments                Dest Port Time slot assignments
Voice/Data....: Data
00 T1E1A_01_ 12 T1E1A_01_ 24 T1E1A_01_  00 T1E1A_01_ 12 T1E1A_01_ 24 T1E1A_01_
01 T1E1A_01_ 13 T1E1A_01_ 25 T1E1A_01_  01 T1E1A_01_ 13 T1E1A_01_ 25 T1E1A_01_
02 T1E1A_01_ 14 T1E1A_01_ 26 T1E1A_01_  02 T1E1A_01_ 14 T1E1A_01_ 26 T1E1A_01_
03 T1E1A_01_ 15 T1E1A_01_ 27 T1E1A_01_  03 T1E1A_01_ 15 T1E1A_01_ 27 T1E1A_01_
04 T1E1A_01_ 16 T1E1A_01_ 28 T1E1A_01_  04 T1E1A_01_ 16 T1E1A_01_ 28 T1E1A_01_
05 T1E1A_01_ 17 T1E1A_01_ 29 T1E1A_01_  05 T1E1A_01_ 17 T1E1A_01_ 29 T1E1A_01_
06 T1E1A_01_ 18 T1E1A_01_ 30 T1E1A_01_  06 T1E1A_01_ 18 T1E1A_01_ 30 T1E1A_01_
07 T1E1A_01_ 19 T1E1A_01_ 31 T1E1A_01_  07 T1E1A_01_ 19 T1E1A_01_ 31 T1E1A_01_
08 T1E1A_01_ 20 T1E1A_01_               08 T1E1A_01_ 20 T1E1A_01_
09 T1E1A_01_ 21 T1E1A_01_               09 T1E1A_01_ 21 T1E1A_01_
10 T1E1A_01_ 22 T1E1A_01_               10 T1E1A_01_ 22 T1E1A_01_
11 T1E1A_01_ 23 T1E1A_01_               11 T1E1A_01_ 23 T1E1A_01_

[V]iew all connections         [C]lear connection timeslots
```

2. Populate this screen with specific map information. For information on these fields, refer to the following section *Field Descriptions*.

3. To view all connections press **V** or to clear connection timeslots press **C**.

4. When complete press **X**.

   A message is displayed asking if you want to update the configuration.

5. Press **Y**.

   The map information is modified.

Deleting an Active Map

To delete an Active Map, follow the procedure below.

1. From the Map Configuration screen press **D** to delete a map.

   A message is displayed asking if you want to delete this map.

2. Press **Y**.

   The selected map is deleted.

Field Descriptions

Table 6-1 lists the field descriptions for the Active Map menu items.

Table 6-1: *Map Configuration Field Descriptions*

Field	Description
Name: *(display field)*	Displays the connection name, up to 19 alphanumeric characters, from the Add New Connection screen.
Src (Source): *(display field)*	Displays the source for the connection. The 8-digit identifier is broken into four 2-digit parts separated by decimal points, and indicates the physical unit, slot, port, and starting timeslot (if applicable) of the source module for the connection.
Dest (Destination): *(display field)*	Displays the destination for the connection. The 8-digit identifier is broken into four 2-digit parts separated by decimal points, and indicate the physical unit, slot, port and starting timeslot (if applicable) of the destination module for the connection.
Speed: *(display field)*	Displays the transmission speed. Each timeslot equals 56 or 64 kbps, depending upon whether voice or data is being sent.
Type: *(display field)*	Displays the type of traffic being connected (either Data (**D**), Voice (**V**) or Voice/AutoMu (**Vm**) as well as the type of connection. ***Note:*** *If T1 or E1 links are configured for Clear, such as framed or unframed, then select Data as the Type.* The connection types are: • *BCR* - Broadcast-Connection—Transmits data from the declared source to the declared destination as a one-way connection. • *BCM* - Broadcast-Master—Transmits data from a single declared source to a number of ports at once. Broadcast Master declares no initial destination, “listen” ports are declared after the broadcast master is defined. This is a half-duplex (one-way) connection. An example of this would be a stock “ticker tape” output being sent to multiple displays. • *FDX* - Full-Duplex—Transmits and receives data to/from a declared destination as a two-way connection. • *L-SRC* - Listen-Source. Monitors the source of any configured connection. This is a non-disruptive half-duplex (one-way) connection. • *L-DEST* - Listen-Destination. Monitors the destination of any configured connection. This is a non-disruptive, half-duplex (one-way) connection that is only meaningful when listening to a Full Duplex connection. • *SUBCH* - Subchannel. Used for 2 or 4 bit switching without the compression and decompression. Allows you to map 2 or 4 bits worth of data from one link to another based on the size of the selected bit group. The number of bits used will be previously selected using the Transcoder Configuration Menu. • *SUBSW* - Subrate Switching. Transmits and receives data on a 32 kbps portion of a 64 kbps timeslot (DS0), which in turn allows cross connection of each half of a timeslot to two different destination half-timeslots. • *VCMP* - Voice Compression. Transmits and receives voice data between the uncompressed source and the compressed destination link.

Setting Up a Connection Filter

This function can be performed from the Map Configuration screen and also from the Map Configuration menu selection. Refer to Setting Up a Connection Filter for more information.

Setting Up Transcoder Information

This function can be performed from the Map Configuration screen and also from the Map Configuration menu selection. Refer to Setting Up Transcoder Information for more information.

Setting Up Subrate Information

This function can be performed from the Map Configuration screen and also from the Map Configuration menu selection. Refer to Setting Up Subrate Information for more information.

Map Configuration

The Configuration Maps Menu is displayed by selecting Map Configuration from the Connection Maps Manager Menu. From this menu you can activate a map, copy a map, delete all connections from a map or select a map to configure.

The Configuration Maps Menu, in the factory default state, contains generic map names and descriptions as well as a defining Map Number 01 as the default active map.

Note: *Due to system memory limitations, it may not be possible to have three fully configured (full) maps when utilizing all subrate connections.*

Navigation:
DNX-1u Main Menu ↓ Connection Maps ↓ Map Configuration

Map Commands

Table 6-2 lists the Connection Map commands to configure maps and display at the bottom of most connection map-related screens.

Table 6-2: *Connection Map Commands*

Command	Description
F	Creates connection filters for the map display. Only connections that match the filter criteria are displayed. To view all connections, ensure the Filter ID is set to *none*.
A	Adds a new cross-connection to a map.
D	Deletes a cross-connection from a map.
L	Listens to a cross-connection from the source port.
i	Listens to a cross-connection from the destination port.
T	Sets up a Voice Compression or Subchannel connection (transcoder).
S	Sets up a Subrate connection.
H, E, N, P	Home, End, Next, Previous: Used to navigate through the list of cross-connections in the map.

Note: *You must exit the Active Map menu in order to update the edited map.*

Accessing Map Configuration Information

To access Map Configuration information, follow the procedure below.

1. From the DNX-1u Main Menu, click on **Connection Maps** and then on **Map Configuration**.

   The Configuration Maps Menu is displayed.

Figure 6-5: *Configuration Maps Menu*

```
System ID: default name Unit #1                                    Help = [?]
Sycamore Networks, Inc.          DNX-1u

                           Configuration Maps Menu
                                                          Conn.
             No.   Name         Description           Status   Count  Checksum
             ---   -----------  -------------------   ------   -----  --------
             01    Map 01       Map 01 description    Active   1      9649
             02    Map 02       Map 02 description             0      0
             03    Map 03       Map 03 description             0      0









[A]ctivate map    [T]ag map for copy      [C]opy to all tagged maps
[D]elete map
```

2. From this screen you can perform various tasks. Refer to the procedure below to:
   - **[A]**ctivate a map
   - **[T]**ag a map for copy - Tags the selected map. Causes an asterisk to display next to the Map Name, indicating that it is tagged and ready to have another map copied to it.
   - **[C]**opy to all tagged maps - Selects the map which will be copied to all tagged maps.
   - **[D]**elete map - Deletes all connections from the selected map.

Note: *When multiple Telnet sessions are open and you copy a connection map, the other Telnet sessions will disconnect due to processor utilization. The other sessions will be unable to re-connect while the map is being copied.*

Setting Up a Connection Filter

You can specify a Connection Filter so that only connections that match the filter criteria are displayed in the maps. For example, if a port number is specified, only cross-connections that use the specified port number are displayed in the map.

Note: *When you specify a Connection Filter, the filter is active for all maps and will stay activated until it is turned off.*

To set up a Connection Filter for a specific map, follow the procedure below.

1. From the Configuration Maps Menu move your cursor to the map you want to add filter information for and press **Enter**.

   The Map Configuration screen is displayed.

2. Select a map and then press **F** to set up filter information.

   The Connection Filter Configuration screen is displayed.

Figure 6-6: *Connection Filter Configuration Screen*

```
System ID: DNX-1u No.1                                          Help = [?]
Sycamore Networks, Inc.          DNX-1u

                       Connection Filter Configuration

                  Filter ID........: None
                  Connection Name..: ConnMap1
                  Connection Type..: FDX
                  Unit Number......: 01
                  Sub-system.......: 01 - T1E1-A
                  Port Number......: 1
                  Timeslot Number..: 1
```

3. Populate this screen with specific map information. For information on these fields, refer to the following section *Field Descriptions*.

4. When complete press **X**.

   A message is displayed asking if you want to update the configuration.

5. Press **Y**.

   The filter information is configured.

Field Descriptions

Table 6-3 lists the field descriptions to set up a filter configuration.

Table 6-3: *Connection Filter Configuration Field Descriptions*

Field	Description
Filter ID: *(option field)*	Specifies a filter ID. The choices are: • *None* • *By Connection Name* • *By Connection Type* • *By Unit* • *By Unit.Sub-system* • *By Unit.Sub-system.Port.Timeslot* • *By First Unit.Sub-system.Port.Timeslot* • *By Data* • *By Voice*
Connection Name: *(text field)*	Specifies the name of the connection, up to 19 alphanumeric characters. A wildcard (*) can be used. For example, to limit the display to all connections that have connection names that begin with src, enter src*. ***Note:*** *The system will ONLY recognize a wildcard when used as the LAST character of a Connection Name text string. For example, 1-0* will display all connections that have the "1-0" suffix.*
Connection Type: *(option field)*	Specifies the connection type. The choices are: • *BRC:* Broadcast Connection • *BRM*: Broadcast Master • *FDX*: Full Duplex • *L-SRC:* Listen-Source • *L-DEST:* Listen-Destination • *UBCH*: Subchannel • *SUBSW*: Subrate Switching • *VCMP*: Voice Compression
Unit number: *(option field)*	Indicates the unit number for the connection(s) to display in the map.
Sub-system: *(option field)*	Indicates the subsystem of the connection(s) to display in the map.
Port number: *(option field)*	Indicates the port number of the connection to display in the map.
Timeslot number: *(option field)*	Indicates the timeslot number for the connection to display in the map.

Setting Up a Transcoder Connection

Note: Transcoder functionality is available only on units containing Transcoder hardware when the ADPCM Transcoder Feature option is enabled through a Feature Option Key.

Transcoder connections allow you to set up a Full Duplex compression/decompression connection between the uncompressed source and the compressed destination links. This is accomplished by assigning the destination to a specific bit group which consists of a 32 kbps (2:1) portion of the destination timeslot.

The DNX-1u allows *two* different types of Transcoder connections:

- **Voice Compression** - Used for normal compression and decompression. Allows you to set up a Full Duplex compression/decompression connection between the uncompressed source and the compressed destination links. The compression ratio is 2:1.
- **Subchannel** - Used for the 2 or 4 bit switching without the compression and decompression. Allows you to map 2 or 4 bits worth of data from one link to another based on the size of the selected bit group. The number of bits used will be previously selected using the Transcoder Configuration Menu.

To set up a Transcoder connection for a specific map, follow the procedure below.

1. From the Configuration Maps Menu move your cursor to the map you want to add a Transcoder connection for and press **Enter**.

   The Map Configuration screen is displayed.

2. Select a map and then press **T** to set up a Transcoder connection.

   The Add New Connection screen is displayed.

Figure 6-7: *Add New Connection Screen (Transcoder)*

```
System ID: default name Unit #1                                    Help = [?]
Sycamore Networks, Inc.           DNX-1u
                          Add New Connection Screen

Connection name:                        Type...........: Voice Compression

Src unit.......: 01                     Dest unit......: 01
Src subsystem..:                        Dest subsystem.:
Src port.......: 01                     Dest port......: 01
Src timeslot...: 01                     Dest timeslot..: 01
                                        Bit group......:




Speed..........: 32 kbps (2:1)




[S]ave connection
```

3. Set the parameters of the connection. Pay particular attention to the destination bit group where the connection is being mapped, because you may already be using the other bit group(s) as a destination for another connection. For information on these fields, refer to the following section *Field Descriptions*.
4. When complete press **X**.

   A message is displayed asking if you want to update the configuration.
5. Press **Y**.

   The Transcoder information is configured.

Field Descriptions

Table 6-4 lists the field descriptions to set up a Transcoder connection.

Table 6-4: *Transcoder Connection Field Descriptions*

Field	Description
Connection Name: *(text field)*	Specifies the name of the connection, up to 19 alphanumeric characters.
Type: *(option field)*	Indicates the type of Transcoder connection. The choices are: • *Voice Compression* - For compression and decompression. • *Sub-channel* - For 2 or 4 bit switching without the compression and decompression.
Src unit, Src subsystem, and **Src port:** *(option field)*	Specifies the source unit (currently fixed at *01* for DNX-1u), source subsystem, and source port for the connection. When starting to map the connection, the unit and port will default to 01; however, you can change the subsystem and port numbers.
Src timeslot: *(option field)*	Specifies the source timeslot number (DS0).
Dest unit, Dest subsystem, and **Dest port:** *(option field)*	Specifies the destination unit (currently fixed at *01* for DNX-1u), destination subsystem, and destination port for the connection. When starting to map the connection, the unit and port will default to 01; however, you can change the subsystem and port numbers.
Dest timeslot: *(option field)*	Indicates the destination timeslot number (DS0).
Bit group: *(option field)*	Indicates the Bit Group of the destination timeslot to which the 64 kbps source timeslot is mapped. Bit Group selections depend upon the compression rate (Speed) previously selected using the Transcoder Configuration Menu. At the compression rate of 2:1, two bit groups are available: • *(1-4)* - For bits 0 to 3 (4 bits/group) • *(5-8)* - For bits 4 to 7 (4 bits/group)
Speed: *(display field)*	Displays the selected speed and compression ratio, 32 kbps (2:1).

Setting Up a Subrate Connection

Note: *Subrate Cross Connections are available only when the* Subrate Switching Fe*ature option is enabled through a Feature Option Key.*

Subrate connections allow you to set up a Full Duplex cross-connection on a 32 kbps portion of a 64 kbps timeslot (DS0). The DNX-1u accomplishes this by dividing the 8 bits of a 64 kbps timeslot into two 4-bit “nibbles”. Bits 1 to 4 are designated as the high nibble, and bits 5-8 are designated as the low nibble. The 32 kbps “high” or “low” nibble of the source is then mapped into the “high” or “low” nibble of the destination timeslot. Bit 1 of each timeslot is sent first according to ANSI T1.403, so the high nibble will be sent first.

The DNX-1u allows the source high or low nibble to be mapped to either the of the destination nibbles. A source high nibble does not have to be mapped to a destination high nibble, it can be mapped to a destination low nibble. This feature allows for more flexibility when setting up cross connections.

To set up a Subrate connection for a specific map, follow the procedure below.

1. From the Configuration Maps Menu move your cursor to the map you want to add a Subrate connection for and press **Enter**.

   The Map Configuration screen is displayed.

2. Select a map and then press **S** to set up a Subrate connection.

   The Add New Connection screen is displayed.

Figure 6-8: *Add New Connection Screen (Subrate)*

```
System ID: DNX-1u No.1                                          Help = [?]
Sycamore Networks, Inc.            DNX-1u
                           Add New Connection Screen

Connection name:                        Type...........: Sub-rate

Src unit.......: 01                     Dest unit......: 01
Src subsystem..:                        Dest subsystem.:
Src port.......: 01                     Dest port......: 01
Src timeslot...: 01                     Dest timeslot..: 01
Src nibble.....: Low                    Dest nibble....: Low
Src Trunk Cond.: Profile 1              Dest Trunk Cond: Profile 1


Speed..........: 32 kbps









[S]ave connection
```

3. Set the parameters of the connection. Pay particular attention to the destination nibble to which the connection is being mapped, because you may already be using the other nibble as a destination for another connection. For information on these fields, refer to the following section *Field Descriptions*.
4. When complete press **X**.

   A message is displayed asking if you want to update the configuration.
5. Press **Y**.

   The Subrate information is configured.

Field Descriptions

Table 6-5 lists the field descriptions to set up a Subrate connection.

Table 6-5: *Subrate Connection Field Descriptions*

Field	Description
Connection Name: *(text field)*	Specifies the name of the connection, up to 19 alphanumeric characters; however, only the first four characters will be displayed on the Change Connection screen. ***Note:*** *It is recommended to use a four-character identifier for Subrate connections, otherwise the default names will be indistinguishable from one another when viewing timeslot allocations.*
Type: *(display field)*	Displays the type of connection as *Subrate*.
Src unit, Src subsystem, and **Src port:** *(option field)*	Specifies the source unit (currently fixed at *01* for DNX-1u), source subsystem (*T1E1-A* or *T1E1-B*), and source port (*1-4*) for the connection. When starting to map the connection, the port and timeslot will default to *01*; however, you can change the subsystem and port numbers.
Src timeslot: *(option field)*	Indicates the source timeslot number (DS0).
Src nibble: *(option field)*	Specifies the source *High* (Bits 1-4) or *Low* (Bits 5-8) nibble.
Src Trunk Cond. *(option field)*	Specifies the source trunk conditioning profile number. ***Note:*** *Different trunk conditioning profiles can be set for source and destination links in a connection map.*
Dest unit, Dest subsystem, and **Dest port:** *(option field)*	Indicates the destination unit (currently fixed at *01* for DNX-1u), destination subsystem, and destination port for the connection. When starting to map the connection, the port and timeslot will default to 01; however, you can change the subsystem and port numbers.
Dest timeslot: *(option field)*	Selects the destination timeslot number (DS0).
Dest nibble: *(option field)*	Specifies the destination *High* (Bits 1-4) or *Low* (Bits 5-8) nibble.
Dest Trunk Cond. *(option field)*	Specifies the destination trunk conditioning profile number. ***Note:*** *Different trunk conditioning profiles can be set for source and destination links in a connection map.*
Speed: *(display field)*	Displays the subrate speed as *32 kbps* for a subrate connection.

Setting Up a Listen-Source Connection

Listening to a connection is just what it sounds like, being able to monitor the source or destination of any configured connection. There is a one-way path from the source or destination to the listening port. A Listen-Source connection can be configured no matter which type of original connection is made - Full Duplex (FDX), Broadcast Connection (BRC), or Broadcast Master (BRM). A Listen-Destination connection is only meaningful on a Full Duplex connection.

To set up a Listen-Source connection for a specific map, follow the procedure below.

1. From the Configuration Maps Menu move your cursor to the map you want to add a Listen-Source connection for and press **Enter**.

   The Map Configuration screen is displayed.

2. Select a map and then press **L** to set up a Listen-Source connection.

   The Add New Connection screen is displayed.

Figure 6-9: *Add New Connection Screen (Listen-Source)*

```
System ID: default name Unit #1                                    Help = [?]
Sycamore Networks, Inc.           DNX-1u
                          Add New Connection Screen

Connection Name.:                       Type............: Listen-Source

Src unit.......: 01                     Dest unit.......: 01
Src subsystem..: T1E1-A                 Dest subsystem..: 01 - T1E1-A
Src Port.......: 02                     Dest Port.......: 01
Starting Src Ts: 01                     Starting Dest Ts: 01
Src Trunk Cond.: Profile 1              Voice/Data......: Data
Speed..........: 128/64 (2 TS)
Ts Allocation..: Auto-Consecutive









[S]ave connection
```

3. Set the parameters of the connection. For information on these fields, refer to the following section *Field Descriptions*.

4. When complete press **S** to save and configure another Listen-Source connection or press **X** to save and exit.

   When save the connection, you will be prompted to view the timeslot allocation.

5. Press **Y** to view the timeslot allocation. Make changes and save, if needed.

6. When complete press **X**.

   A message is displayed asking if you want to update the configuration.

7. Press **Y**.

   The Listen-Source connection is configured.

Note: *The connection is not actually enabled until you exit the Add New Connection Screen and the connection is saved to the database. Until then, the new connection will NOT pass traffic.*

Setting Up a Listen-Destination Connection

To set up a Listen-Destination connection for a specific map, follow the procedure below.

1. From the Configuration Maps Menu move your cursor to the map you want to add a Listen-Destination connection for and press **Enter**.

   The Map Configuration screen is displayed.

2. Select a map and then press **i** to set up a Listen-Destination connection.

   The Add New Connection screen is displayed.

3. Set the parameters of the connection. For information on these fields, refer to the following section *Field Descriptions*.

4. When complete press **S** to save and configure another Listen-Destination connection or press **X** to save and exit.

   When save the connection, you will be prompted to view the timeslot allocation.

5. Press **Y** to view the timeslot allocation. Make changes and save, if needed.

6. When complete press **X**.

   A message is displayed asking if you want to update the configuration.

7. Press **Y**.

   The Listen-Source connection is configured.

Note: *The connection is not actually enabled until you exit the Add New Connection Screen and the connection is saved to the database. Until then, the new connection will NOT pass traffic.*

Field Descriptions

Table 6-6 lists the field descriptions to set up Listen connections.

Table 6-6: *Add New Connection Field Descriptions*

Field	Description
Connection Name: *(text field)*	Specifies the name for the connection you are configuring, up to 19 alphanumeric characters.
Type: *(display field)*	Displays the type as Listen Source or Listen-Destination.
Src unit, Src subsystem, and **Src port:** *(option field)*	Indicates the source unit (currently fixed at *01* for DNX-1u), source subsystem, and source port for the connection. When starting to map the connection, the unit and port will default to 01; however, you can change the subsystem and port numbers.
Starting Src timeslot: *(option field)*	Specifies the source timeslot number (DS0).
Src Trunk Cond: *(option field)*	Specifies the source trunk conditioning profile number.
Speed: *(display field)*	Displays the selected speed and compression ratio of 32 kbps (2:1).
Ts Allocation: *(option field)*	Specifies the timeslot allocation, either: *Manual*, *Auto-Consecutive* or *Auto-Alternate*.
Dest unit, Dest subsystem, and **Dest port:** *(option field)*	Specifies the destination unit (currently fixed at *01* for DNX-1u), destination subsystem, and destination port for the connection. When starting to map the connection, the unit and port will default to *01*; however, you can change the subsystem and port numbers.
Starting Dest Ts: *(option field)*	Specifies the destination timeslot number (DS0).
Voice/Data: *(option field)*	Specifies the type of traffic, either *Voice* or *Data*.

Activating a Map

A map can be manually activated. Map 01 is the factory default active map for the DNX-1u.

To activate a map, follow the procedure below.

1. From the Configuration Maps Menu move your cursor to the map you want to activate and press **A** to activate.

   A message is displayed asking if you want to change the active map.

2. Press **Y**.

   The selected map is now activated.

Note: *The Status entry for the map changes to Active. There can only be one active map at any time.*

Copying a Map

You can create one or more copies of a map. Also, copying an existing map can be useful when creating a new map.

Note: *You cannot copy a map into an Active Map.*

To copy a map, follow the procedure below.

1. From the Configuration Maps Menu move your cursor to the map you want to copy and press **T** to tag this map. You can tag one or more maps to become copies. An asterisk displays next to the maps that are tagged.

Note: *Ensure that you do not attempt to copy a map unless the tagging process is completed.*

Figure 6-10: *Configuration Maps Menu with Maps 02 and 03 Tagged to Receive Copy*

```
System ID: default name Unit #1                                    Help = [?]
Sycamore Networks, Inc.          DNX-1u

                            Configuration Maps Menu
                                                                 Conn.
             No.   Name         Description           Status   Count  Checksum
             ---   -----------  -------------------   ------   -----  --------
             01    Map 01       Map 01 description    Active   1      697
             02   *Map 02       Map 02 description             0      0
             03   *Map 03       Map 03 description             0      0









[A]ctivate map    [T]ag map for copy      [C]opy to all tagged maps
[D]elete map
```

2. Move your cursor to the map you want to use as the source and press **C** to begin the copying process.

   A message is displayed asking if you want to copy the selected map to the tagged maps.

3. Press **Y** to confirm the copy.
4. The display cycles through several changes to display progress in the copying process. When the copying process completes, the message “Map file copy completed” is displayed.
5. Press any key to continue.
6. To modify the information for these copies, refer to the next section Modifying a Map.

Note: *When multiple Telnet sessions are open and a Connection map is copies, the other Telnet sessions will disconnect due to processor utilization and will be unable to re-connect while the map is being copied. In addition, if there is another Admin user working in the configuration maps using Telnet, you will not be able to tag maps until the other user exits the screen.*

Modifying a Map

To modify a Map, follow the procedure below.

1. From the Map Configuration move your cursor to the map you want to modify and press **Enter**.

   The Change Connection screen is displayed for the selected map.

Figure 6-11: *Change Connection Screen*

```
System ID: default name Unit #1                                    Help = [?]
Sycamore Networks, Inc.           DNX-1u
                          Change Connection Screen

Connection Name: ConnMap1                    Type............: Full-Duplex
Src Port.......: 01.T1E1-A.02                Dest port.......: 01.T1E1-B.02
Src Trunk Cond.: Profile 1                   Dest Trunk Cond.: Profile 1
Speed:           128/64 (2 TS)               Data/Voice......: Data
--------------------------------------------------------------------------------

Src Port Time slot assignments               Dest Port Time slot assignments
Voice/Data....: Data
01 ConnMap1   13 ..........                  01 ConnMap    13 .........
02 ........   14 ..........                  02 ConnMap    14 .........
03 ........   15 ..........                  03 ........   15 .........
04 ........   16 ..........                  04 ........   16 .........
05 ........   17 ..........                  05 ........   17 .........
06 ........   18 ..........                  06 ........   18 .........
07 ........   19 ..........                  07 ........   19 .........
08 ........   20 ..........                  08 ........   20 .........
09 ........   21 ..........                  09 ........   21 .........
10 ........   22 ..........                  10 ........   22 .........
11 ........   23 ..........                  11 ........   23 .........
12 ........   24 ..........                  12 ........   24 .........

[V]iew all connections         [C]lear connection timeslots
```

2. Populate this screen with specific map information. For information on these fields, refer to the following section *Field Descriptions*.

3. To view all connections press **V** or to clear connection timeslots press **C**.

4. When complete press **X**.

   A message is displayed asking if you want to update the configuration.

5. Press **Y**.

   The map information is modified.

Field Descriptions

Table 6-7 lists the field descriptions for the Change Connection screen.

Table 6-7: *Change Connection Screen Field Descriptions*

Field	Description
Connection Name: *(display field)*	Displays the connection name from the Add New Connection screen.
Src (Source): *(display field)*	Displays the source for the connection. The 8-digit identifier is broken into four 2-digit parts separated by decimal points, and indicate the physical unit, slot, port, and starting timeslot (if applicable) of the source module for the connection.
Src Trunk Cond. *(option field)*	Specifies the source trunk conditioning profile number. ***Note:*** *Different trunk conditioning profiles can be set for source and destination links in a connection map.*
Dest (Destination): *(display field)*	Displays the destination for the connection. The 8-digit identifier is broken into four 2-digit parts separated by decimal points, and indicate the physical unit, slot, port and starting timeslot (if applicable) of the destination module for the connection.
Dest Trunk Cond. *(option field)*	Specifies the destination trunk conditioning profile number. ***Note:*** *Different trunk conditioning profiles can be set for source and destination links in a connection map.*
Speed: *(display field)*	Displays the transmission speed. Each timeslot equals 56 or 64 kbps, depending upon whether voice or data is being sent.
Type: *(display field)*	Displays the type of traffic being connected (either Data (**D**), Voice (**V**) or Voice/AutoMu (**Vm**) as well as the type of connection. ***Note:*** *If T1 or E1 links are configured for Clear, such as framed or unframed, then select Data as the Type.* The connection types are: • *BRC* - Broadcast Connection. Transmits data from the declared source to the declared destination as a one-way connection. • *BRM* - Broadcast Master. Transmits data from a single declared source to a number of ports at once. Broadcast Master declares no initial destination, “listen” ports are declared after the broadcast master is defined. This is a half-duplex (one-way) connection. An example of this would be a stock “ticker tape” output being sent to multiple displays. • *FDX* - Full Duplex. Transmits and receives data to/from a declared destination as a two-way connection. • *L-SRC* - Listen-Source. Monitors the source of any configured connection. This is a non-disruptive half-duplex (one-way) connection. • *L-DEST* - Listen-Destination. Monitors the destination of any configured connection. This is a non-disruptive, half-duplex (one-way) connection that is only meaningful when listening to a Full Duplex connection. • *SUBCH* - Subchannel. Used for 2 or 4 bit switching without the compression and decompression. Allows you to map 2 or 4 bits worth of data from one link to another based on the size of the selected bit group.

Table 6-7: *Change Connection Screen Field Descriptions*

Field	Description
Type: Cont...*(display field)*	• *SUBSW* - Subrate Switching. Transmits and receives data on a 32 kbps portion of a 64 kbps timeslot (DS0), which in turn allows cross connection of each half of a timeslot to two different destination half-timeslots. • *VCMP* - Voice Compression. Transmits and receives voice data between the uncompressed source and the compressed destination link. The compression ratio is 2:1.
Voice/Data: *(option field)*	Specifies the type of traffic, either *Voice* or *Data*.

Displaying a Map

To display a map, follow the procedure below.

1. From the Configuration Maps Menu, move your cursor to the map that you want to display and press **Enter**.

   The Map Configuration screen is displayed.

2. To view specific information about a map, move your cursor to the specific map name and press **Enter**.

   The Change Connection screen is displayed with additional information on this map.

Deleting a Map

To delete a map, follow the procedure below.

1. From the Map Configuration screen press **D** to delete a map.

   A message is displayed asking if you want to delete this map.

2. Press **Y**.

   The selected map is deleted.

New Connections

To add a new cross-connection to a map, you must specify the source and destination. If the timeslots specified are already filled, the DNX-1u will automatically assign available timeslots; however, you have the option to display the new timeslot allocation and make changes, if necessary.

Note: *Connections can be made without application modules present as long as "configured type" is entered properly. Prior to configuring a connection, the link or port must first be configured. Ensure the connection timeslots are compatible with the type of link or port configured, otherwise an error message is displayed when you try to save the connection.*

Navigation:
DNX-1u Main Menu ↓ Connection Maps ↓ Map Configuration ↓ Select Map for New Connection ↓ **[A]dd**

Figure 6-12: *Add Connection Flowchart*

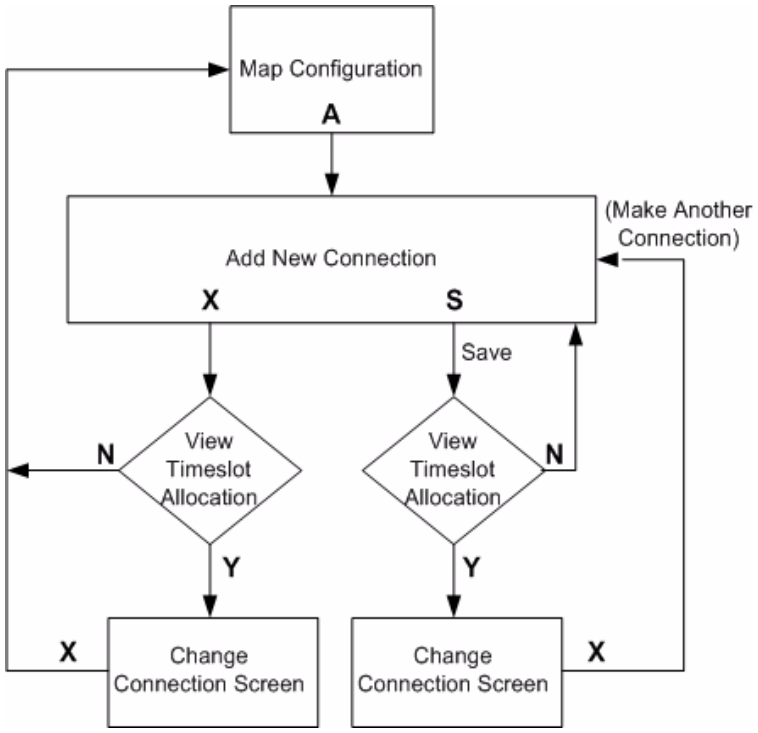

Note: *Any time a change is made to a map (active or inactive), the connection does not take effect (pass traffic) until you exit the connection screen, and the change is saved to the database.*

Adding a New Timeslot Connection to a Map

Note: *Prior to configuring a connection, the link or port must first be configured. Ensure the connection timeslots are compatible with the type of link or port configured, otherwise an error message is displayed when you try to save the connection.*

To add a new timeslot connection to a map, follow the procedure below.

1. From the DNX-1u Main Menu, click on **Connection Maps** and then on **Map Configuration**.

   The Configuration Maps Menu is displayed.

2. Move your cursor to the selected map and press **Enter**.

   The Map Configuration screen is displayed.

3. Press **A** to add a new connection.

   The Add New Connection screen is displayed.

Figure 6-13: *Add New Connection Screen*

```
System ID: default name Unit #1                                    Help = [?]
Sycamore Networks, Inc.            DNX-1u
                           Add New Connection Screen

Connection name:                        Type...........: Full-Duplex

Src unit.......: 01                     Dest unit.......: 01
Src subsystem..:                        Dest subsystem..:
Src port.......: 01                     Dest port.......: 01
Src Starting Ts: 01                     Dest Starting Ts: 01
Src Trunk Cond.: Profile 1              Dest Trunk Cond.: Profile 1



Speed..........: 56K      (1 TS)
Voice/Data....: Data
Ts Allocation.: Auto-Consecutive





[S]ave connection
```

4. Populate this screen with specific connection information. For information on these fields, refer to the following section *Field Descriptions*.
5. Press **S** to make additional connections, or, if no additional connections are being configured, press **X**.

   A message is displayed asking if you want to view timeslot allocation.

6. Press **Y** or **N** as needed. If **Y** is pressed, go on to step 8.
7. If you pressed **N** and are configuring multiple connections, the timeslot allocation is not displayed, but the new connection is still made. The *Add New Connection Screen* is present, and the connection is configured.

   The Change Connection screen is displayed with the new cross-connection.

Note: *The connection will not be enabled or pass traffic until you exit the Add New Connection Screen and save the connection to the database. Removing the connection requires the same process before it is complete.*

Figure 6-14: *Change Connection Screen*

```
System ID: default name Unit #1                                        Help = [?]
Sycamore Networks, Inc.           DNX-1u
                            Change Connection screen

Connection Name: 1.T1E1-A.1.1                  Type.......: Full-Duplex
Src Port.......: 01.T1E1-A.01                  Dest Port......: 01.T1E1-B.01
Src Trunk Cond.: Profile 1                     Dest Trunk Cond: Profile 1
Speed..........: 1536K/64 (24 TS)              Data/Voice.....: Data
-------------------------------------------------------------------------------
Src Port Time slot assignments          Dest Port Time slot assignments
01 1.T1E1-A 13 1.T1E1-A                 01 1.T1E1-B 13 1.T1E1-B
02 1.T1E1-A 14 1.T1E1-A                 02 1.T1E1-B 14 1.T1E1-B
03 1.T1E1-A 15 1.T1E1-A                 03 1.T1E1-B 15 1.T1E1-B
04 1.T1E1-A 16 1.T1E1-A                 04 1.T1E1-B 16 1.T1E1-B
05 1.T1E1-A 17 1.T1E1-A                 05 1.T1E1-B 17 1.T1E1-B
06 1.T1E1-A 18 1.T1E1-A                 06 1.T1E1-B 18 1.T1E1-B
07 1.T1E1-A 19 1.T1E1-A                 07 1.T1E1-B 19 1.T1E1-B
08 1.T1E1-A 20 1.T1E1-A                 08 1.T1E1-B 20 1.T1E1-B
09 1.T1E1-A 21 1.T1E1-A                 09 1.T1E1-B 21 1.T1E1-B
10 1.T1E1-A 22 1.T1E1-A                 10 1.T1E1-B 22 1.T1E1-B
11 1.T1E1-A 23 1.T1E1-A                 11 1.T1E1-B 23 1.T1E1-B
12 1.T1E1-A 24 1.T1E1-A                 12 1.T1E1-B 24 1.T1E1-B

[V]iew all connections      [C]lear connection timeslots
```

8. The appearance of this screen is determined by the way the link/port is configured, as different types of links have different timeslot/channel numbering. There are eight different Change Connection screens (case studies) that are possible. They are used to display the following types of T1 timeslot/ E1 channel numbering schemes. Refer to Connection Screen Examples for examples of the various connection screens:
   - Case A: Standard T1 DS0 Numbering (Figure 6-15)
   - Case B: Clear T1 Framed Numbering (Figure 6-16)
   - Case C: Clear T1 Unframed Numbering (Figure 6-17)
   - Case D: E1 CAS Numbering (Figure 6-18)
   - Case E: Clear E1 Framed CAS Numbering (Figure 6-19)
   - Case F: E1 NSA Numbering (Figure 6-20)
   - Case G: Clear E1 Framed NSA Numbering (Figure 6-21)
   - Case H: Clear E1 Unframed Numbering (Figure 6-22)
9. When complete press **X**.

   A message is displayed asking if you want to update the configuration.
10. Press **Y**.

    The new connection is configured.

Field Descriptions

Refer to Table 6-7 for field descriptions for the Change Connection screen.

T1/E1 Timeslot Numbering Schemes

Table 6-8 illustrates timeslot numbering for various connection types and Connection screens, which correspond to the examples (Cases A through H) in Connection Screen Examples.

Table 6-8: *T1/E1 Numbering Schemes*

	T1 DS0			E1 CAS Channel		E1 NSA Timeslot		
Byte	**Clear Disabled**	**Clear Framed**	**Clear Unframed**	**Clear Disabled**	**Clear Framed**	**Clear Disabled**	**Clear Framed**	**Clear Unframed**
01	01	01	01	Framing		Framing		0
02	02	02	02	01		01		01
03	03	03	03	02		02		02
04	04	04	04	03		03		03
05	05	05	05	04		04		04
06	06	06	06	05		05		05
07	07	07	07	06		06		06
08	08	08	08	07		07		07
09	09	09	09	08		08		08
10	10	10	10	09		09		09
11	11	11	11	10		10		10
12	12	12	12	11		11		11
13	13	13	13	12		12		12
14	14	14	14	13		13		13
15	15	15	15	14		14		14
16	16	16	16	15		15		15
17	17	17	17	CAS		16		16
18	18	18	18	16		17		17
19	19	19	19	17		18		18
20	20	20	20	18		19		19
21	21	21	21	19		20		20
22	22	22	22	20		21		21
23	23	23	23	21		22		22
24	24	24	24	22		23		23
25	--	Framing	25	23		24		24
26	--	--	--	24		25		25
27	--	--	--	25		26		26
28	--	--	--	26		27		27
29	--	--	--	27		28		28
30	--	--	--	28		29		29
31	--	--	--	29		30		30
32	--	--	--	30		31		31
Case	**A**	**B**	**C**	**D & E**		**F & G**		**H**

Connection Screen Examples

This section provides examples for various connection types used in the DNX-1u.

Standard T1 Connection - Case A

Figure 6-15 is an example of a Standard T1 DS0 connection in the DNX-1u. Standard T1 DS0 Numbering is straightforward in that a T1 always consists of a total of 24 traffic-bearing timeslots that start with timeslot 1, such as 1, 2, 3…24. Framing is handled outside of this 1.536 Mbps, such as 24 DS0s x 64 kbps, bandwidth and voice signalling is supported in-band as robbed bits within specified frames, as required.

Figure 6-15: *Change Connection Screen (Standard T1 DS0 Numbering)*

```
System ID: default name Unit #1                                        Help = [?]
Sycamore Networks, Inc.           DNX-1u
                            Change Connection screen

Connection Name: Case A                        Type.......: Full-Duplex
Src Port.......: 01.T1E1-A.01                  Dest Port......: 01.T1E1-A.02
Src Trunk Cond.: Profile 1                     Dest Trunk Cond: Profile 1
Speed..........: 1536K/64 (24 TS)              Data/Voice.: Data
-------------------------------------------------------------------------------
Src Port Time slot assignments          Dest Port Time slot assignments
01 Case A   13 Case A                   01 Case A   13 Case A
02 Case A   14 Case A                   02 Case A   14 Case A
03 Case A   15 Case A                   03 Case A   15 Case A
04 Case A   16 Case A                   04 Case A   16 Case A
05 Case A   17 Case A                   05 Case A   17 Case A
06 Case A   18 Case A                   06 Case A   18 Case A
07 Case A   19 Case A                   07 Case A   19 Case A
08 Case A   20 Case A                   08 Case A   20 Case A
09 Case A   21 Case A                   09 Case A   21 Case A
10 Case A   22 Case A                   10 Case A   22 Case A
11 Case A   23 Case A                   11 Case A   23 Case A
12 Case A   24 Case A                   12 Case A   24 Case A

[V]iew all connections      [C]lear connection timeslots
```

Clear T1 Framed Connection - Case B

With Clear T1 operation, where the framing bit needs to be transported intact across the DNX-1u cross-connect fabric, a method to pass this 193rd bit is required. To support 1-1 level cross-connects, an internally generated 25th DS0 is utilized within the DNX-1u to transport the framing information including the facility data link (if it is utilized) between the T1/E1 module sets.

Figure 6-16 is an example of a clear T1 framed connection in the DNX-1u, **<FRAME>** is used to denote the 25th DS0 is used to transport framing overhead across the DNX-1u cross-connect fabric.

Figure 6-16: *Change Connection Screen (Clear T1 Framed)*

```
System ID: default name Unit #1                                        Help = [?]
Sycamore Networks, Inc.           DNX-1u
                            Change Connection screen

Connection Name: Case B                        Type.......: Full-Duplex
Src Port.......: 01.T1E1-A.01                  Dest Port......: 01.T1E1-A.02
Src Trunk Cond.: Profile 1                     Dest Trunk Cond: Profile 1
Speed..........: Clear T1 (25 DS0s)            Data/Voice.: Data
-------------------------------------------------------------------------------
Src Port Time slot assignments          Dest Port Time slot assignments
01 Case B   13 Case B    FR <FRAME>     01 Case B   13 Case B   FR <FRAME>
02 Case B   14 Case B                   02 Case B   14 Case B
03 Case B   15 Case B                   03 Case B   15 Case B
04 Case B   16 Case B                   04 Case B   16 Case B
05 Case B   17 Case B                   05 Case B   17 Case B
06 Case B   18 Case B                   06 Case B   18 Case B
07 Case B   19 Case B                   07 Case B   19 Case B
08 Case B   20 Case B                   08 Case B   20 Case B
09 Case B   21 Case B                   09 Case B   21 Case B
10 Case B   22 Case B                   10 Case B   22 Case B
11 Case B   23 Case B                   11 Case B   23 Case B
12 Case B   24 Case B                   12 Case B   24 Case B

[V]iew all connections      [C]lear connection timeslots
```

Clear T1 Unframed Connection - Case C

Figure 6-17 is an example of a clear T1 unframed connection in the DNX-1u. When clear T1 unframed traffic is transported across the DNX-1u platform, the location and nature of any supported framing structure or overhead bit(s) is unknown. As a result, the needed 193rd bit for 1.544 Mbps operation will be placed in the 25th DS0 on an arbitrary basis. For example, it may not be a framing bit if a scheme is employed.

Figure 6-17: *Change Connection Screen (Clear T1 Unframed)*

```
System ID: default name Unit #1                                        Help = [?]
Sycamore Networks, Inc.           DNX-1u
                            Change Connection screen

Connection Name: Case C                        Type.......: Full-Duplex
Src Port.......: 01.T1E1-A.01                  Dest Port......: 01.T1E1-A.02
Src Trunk Cond.: Profile 1                     Dest Trunk Cond: Profile 1
Speed..........: Clear T1 (25 DS0s)            Data/Voice.: Data
-------------------------------------------------------------------------------
Src Port Time slot assignments          Dest Port Time slot assignments
01 Case C   13 Case C    25 Case C      01 Case C   13 Case C   25 Case C
02 Case C   14 Case C                   02 Case C   14 Case C
03 Case C   15 Case C                   03 Case C   15 Case C
04 Case C   16 Case C                   04 Case C   16 Case C
05 Case C   17 Case C                   05 Case C   17 Case C
06 Case C   18 Case C                   06 Case C   18 Case C
07 Case C   19 Case C                   07 Case C   19 Case C
08 Case C   20 Case C                   08 Case C   20 Case C
09 Case C   21 Case C                   09 Case C   21 Case C
10 Case C   22 Case C                   10 Case C   22 Case C
11 Case C   23 Case C                   11 Case C   23 Case C
12 Case C   24 Case C                   12 Case C   24 Case C

[V]iew all connections      [C]lear connection timeslots
```

E1 CAS Connection - Case D

When Channel Associated Signalling (CAS) operation is selected, the framing and signalling channels are terminated at the ingress and egress E1 ports. Therefore, only 30 channels are transported across the cross-connect fabric as needed.

Figure 6-18 is an example of a E1 CAS connection in the DNX-1u, **[FRAME]** denotes that framing overhead is not transported across the cross-connect fabric, and **[CAS]** denotes the signalling channel is not transported (ABCD passed using a DNX-1u signalling bus).

Figure 6-18: *Change Connection Screen (E1 CAS)*

```
System ID: default name Unit #1                                        Help = [?]
Sycamore Networks, Inc.           DNX-1u
                            Change Connection screen

Connection Name: Case D                        Type.......: Full-Duplex
Src Port.......: 01.T1E1-A.01                  Dest Port......: 01.T1E1-A.02
Src Trunk Cond.: Profile 1                     Dest Trunk Cond: Profile 1
Speed..........: 1920K/64 (30 TS)              Data/Voice.: Data
-------------------------------------------------------------------------------
Src Port Time slot assignments          Dest Port Time slot assignments
FR [FRAME]  12 Case D    23 Case D      FR [FRAME]  12 Case D   23 Case D
01 Case D   13 Case D    24 Case D      01 Case D   13 Case D   24 Case D
02 Case D   14 Case D    25 Case D      02 Case D   14 Case D   25 Case D
03 Case D   15 Case D    26 Case D      03 Case D   15 Case D   26 Case D
04 Case D   CS [CAS]     27 Case D      04 Case D   CS [CAS]    27 Case D
05 Case D   16 Case D    28 Case D      05 Case D   16 Case D   28 Case D
06 Case D   17 Case D    29 Case D      06 Case D   17 Case D   29 Case D
07 Case D   18 Case D    30 Case D      07 Case D   18 Case D   30 Case D
08 Case D   19 Case D                   08 Case D   19 Case D
09 Case D   20 Case D                   09 Case D   20 Case D
10 Case D   21 Case D                   10 Case D   21 Case D
11 Case D   22 Case D                   11 Case D   22 Case D

[V]iew all connections      [C]lear connection timeslots
```

Note: *The channel number is different than that expected in that it does not correlate to the timeslot number for channels 16-30 as it does for channels 1-15. This is in accordance with the CAS channel numbering assignment scheme specified in the ITU G.704 Standard.*

Clear E1 Framed CAS Connection - Case E

Figure 6-19 is an example of a clear E1 framed CAS connection in the DNX-1u, **<FRAME>** denotes that framing channel overhead is transported across the cross-connect fabric and **<CAS>** denotes the signalling channel is transported (ABCD not passed using a DNX-1u signalling bus).

Figure 6-19: *Change Connection Screen (Clear E1 Framed CAS)*

```
System ID: default name Unit #1                                        Help = [?]
Sycamore Networks, Inc.           DNX-1u
                            Change Connection screen

Connection Name: Case E                        Type.......: Full-Duplex
Src Port.......: 01.T1E1-A.01                  Dest Port......: 01.T1E1-A.02
Src Trunk Cond.: Profile 1                     Dest Trunk Cond: Profile 1
Speed..........: Clear E1 (32 DS0s)            Data/Voice.: Data
-------------------------------------------------------------------------------
Src Port Time slot assignments          Dest Port Time slot assignments
FR <FRAME>  12 Case E    23 Case E      FR <FRAME>  12 Case E   23 Case E
01 Case E   13 Case E    24 Case E      01 Case E   13 Case E   24 Case E
02 Case E   14 Case E    25 Case E      02 Case E   14 Case E   25 Case E
03 Case E   15 Case E    26 Case E      03 Case E   15 Case E   26 Case E
04 Case E   CS <CAS>     27 Case E      04 Case E   CS <CAS>    27 Case E
05 Case E   16 Case E    28 Case E      05 Case E   16 Case E   28 Case E
06 Case E   17 Case E    29 Case E      06 Case E   17 Case E   29 Case E
07 Case E   18 Case E    30 Case E      07 Case E   18 Case E   30 Case E
08 Case E   19 Case E                   08 Case E   19 Case E
09 Case E   20 Case E                   09 Case E   20 Case E
10 Case E   21 Case E                   10 Case E   21 Case E
11 Case E   22 Case E                   11 Case E   22 Case E

[V]iew all connections      [C]lear connection timeslots
```

E1 NSA Connection - Case F

When Non-Signalling Associated (NSA) operation is selected, the E1 link is strictly supporting data and/or common channel signalling based voice, such as no channel associated signalling traffic. Therefore, a total of 31 channels are available for user information. The framing is resident in the first channel and is terminated within the network or equipment-facing port. Following the initial framing channel, the subsequent channels are numbered in uninterrupted sequence from 01-to-31.

Figure 6-20 is an example of a E1 NSA connection in the DNX-1u, **[FRAME]** denotes that framing channel overhead is not transported across the cross-connect fabric.

Figure 6-20: *Change Connection Screen (E1 NSA)*

```
System ID: default name Unit #1                                        Help = [?]
Sycamore Networks, Inc.           DNX-1u
                            Change Connection screen

Connection Name: Case F                        Type.......: Full-Duplex
Src Port.......: 01.T1E1-A.01                  Dest Port......: 01.T1E1-A.02
Src Trunk Cond.: Profile 1                     Dest Trunk Cond: Profile 1
Speed..........: 1984K/64 (31 TS)              Data/Voice.: Data
-------------------------------------------------------------------------------
Src Port Time slot assignments          Dest Port Time slot assignments
FR [FRAME]  12 Case F    24 Case F      FR [FRAME]  12 Case F   24 Case F
01 Case F   13 Case F    25 Case F      01 Case F   13 Case F   25 Case F
02 Case F   14 Case F    26 Case F      02 Case F   14 Case F   26 Case F
03 Case F   15 Case F    27 Case F      03 Case F   15 Case F   27 Case F
04 Case F   16 Case F    28 Case F      04 Case F   16 Case F   28 Case F
05 Case F   17 Case F    29 Case F      05 Case F   17 Case F   29 Case F
06 Case F   18 Case F    30 Case F      06 Case F   18 Case F   30 Case F
07 Case F   19 Case F    31 Case F      07 Case F   19 Case F   31 Case F
08 Case F   20 Case F                   08 Case F   20 Case F
09 Case F   21 Case F                   09 Case F   21 Case F
10 Case F   22 Case F                   10 Case F   22 Case F
11 Case F   23 Case F                   11 Case F   23 Case F

[V]iew all connections      [C]lear connection timeslots
```

Clear E1 Framed NSA Connection - Case G

In Clear E1 Framed NSA application, the framing channel location and operation is known. Therefore, it can be handled and passed as the first timeslot. All 32 timeslots need to be transported across the cross-connect fabric in timeslot-by-timeslot sequence.

Figure 6-21 is an example of a clear E1 framed NSA connection in the DNX-1u, **<FRAME>** denotes that framing channel overhead is transported across the cross-connect fabric.

Figure 6-21: *Change Connection Screen (Clear E1 Framed NSA)*

```
System ID: default name Unit #1                                        Help = [?]
Sycamore Networks, Inc.           DNX-1u
                            Change Connection screen

Connection Name: Case G                        Type.......: Full-Duplex
Src Port.......: 01.T1E1-A.01                  Dest Port......: 01.T1E1-A.02
Src Trunk Cond.: Profile 1                     Dest Trunk Cond: Profile 1
Speed..........: Clear E1 (32 DS0s)            Data/Voice.: Data
-------------------------------------------------------------------------------
Src Port Time slot assignments          Dest Port Time slot assignments
FR <FRAME>  12 Case G    24 Case G      FR <FRAME>  12 Case G   24 Case G
01 Case G   13 Case G    25 Case G      01 Case G   13 Case G   25 Case G
02 Case G   14 Case G    26 Case G      02 Case G   14 Case G   26 Case G
03 Case G   15 Case G    27 Case G      03 Case G   15 Case G   27 Case G
04 Case G   16 Case G    28 Case G      04 Case G   16 Case G   28 Case G
05 Case G   17 Case G    29 Case G      05 Case G   17 Case G   29 Case G
06 Case G   18 Case G    30 Case G      06 Case G   18 Case G   30 Case G
07 Case G   19 Case G    31 Case G      07 Case G   19 Case G   31 Case G
08 Case G   20 Case G                   08 Case G   20 Case G
09 Case G   21 Case G                   09 Case G   21 Case G
10 Case G   22 Case G                   10 Case G   22 Case G
11 Case G   23 Case G                   11 Case G   23 Case G

[V]iew all connections      [C]lear connection timeslots
```

Clear E1 Unframed Connection - Case H

Figure 6-22 is an example of a clear E1 unframed connection in the DNX-1u. When clear E1 unframed traffic is transported across the DNX-1u platform, the location and nature of any supporting framing structure or overhead channel(s) is unknown; therefore, any special channels cannot be identified. All 32 channels need to be transported across the cross-connect fabric in channel-by-channel sequence.

Figure 6-22: *Change Connection Screen (Clear E1 Unframed)*

```
System ID: default name Unit #1                                        Help = [?]
Sycamore Networks, Inc.           DNX-1u
                            Change Connection screen

Connection Name: Case H                        Type.......: Full-Duplex
Src Port.......: 01.T1E1-A.01                  Dest Port......: 01.T1E1-A.02
Src Trunk Cond.: Profile 1                     Dest Trunk Cond: Profile 1
Speed..........: Clear E1 (24 TS)              Data/Voice.: Data
-------------------------------------------------------------------------------
Src Port Time slot assignments          Dest Port Time slot assignments
00 Case H   12 Case H    24 Case H      00 Case H   12 Case H   24 Case H
01 Case H   13 Case H    25 Case H      01 Case H   13 Case H   25 Case H
02 Case H   14 Case H    26 Case H      02 Case H   14 Case H   26 Case H
03 Case H   15 Case H    27 Case H      03 Case H   15 Case H   27 Case H
04 Case H   16 Case H    28 Case H      04 Case H   16 Case H   28 Case H
05 Case H   17 Case H    29 Case H      05 Case H   17 Case H   29 Case H
06 Case H   18 Case H    30 Case H      06 Case H   18 Case H   30 Case H
07 Case H   19 Case H    31 Case H      07 Case H   19 Case H   31 Case H
08 Case H   20 Case H                   08 Case H   20 Case H
09 Case H   21 Case H                   09 Case H   21 Case H
10 Case H   22 Case H                   10 Case H   22 Case H
11 Case H   23 Case H                   11 Case H   23 Case H

[V]iew all connections      [C]lear connection timeslots
```

Existing Connections

This section allows you to perform the following actions on existing connections:

This screen is used to:

- Re-assign timeslots
- Change the speed

All other parameters are read-only.

Modifying Timeslots

This procedure allows you to modify timeslots by re-assigning them or changing the speed of an existing connection.

To modify timeslot, follow the procedure below.

1. From the DNX-1u Main Menu, click on **Connection Maps** and then on **Map Configuration**.

   The Configuration Maps Menu is displayed.

2. Move your cursor to the selected map and press **Enter**.

   The Map Configuration screen is displayed.

3. Move your cursor to the connection you want to change and press **Enter**.

   Depending on the type of link/port that is configured, one of the various Change Connection screen is displayed.

4. From this screen, you can:
   - Display all connections, press **V**.
   - Clear the connection, press **C**.
   - Change the Speed for the connection.

5. To re-assign timeslots, position the cursor on a timeslot that is currently in use and press **Enter**.

   The selected timeslot is deleted.

6. Position the cursor on a timeslot that is not currently in use and press **Enter**.

   The selected timeslot is added.

7. Ensure the number of timeslots coincides with the connection speed. If it does not match or if you are changing the number of timeslots, adjust the speed parameter or number timeslots in use in order for them to coincide.

8. When complete press **X**.

   A message is displayed asking if you want to update the configuration.

9. Press **Y**.

   The timeslot information is modified.

Clearing all Timeslots and Re-Allocating (Alternate Method)

This procedure allows you to clear all timeslots and then re-allocate them.

To clear all timeslots and re-allocate them, follow the procedure below.

1. From the DNX-1u Main Menu, select **Connection Maps** and then **Map Configuration**. Move your cursor to the map that you want to add a connection to, and press **Enter**. The Map Configuration Menu is displayed.
2. Move the cursor to the connection to be changed and press **Enter**.

   Depending on the type of link/port that is configured, one of the various Change Connection screen is displayed.
3. Press **C** to clear the entire connection.

   Both ends of the connection will be cleared from the screen.
4. Move your cursor to the new Source timeslot(s) and press **Enter** to add a timeslot.
5. Move cursor to the new Destination timeslot(s) and press **Enter** to add a timeslot.
6. When complete press **X**.

   A message is displayed asking if you want to update the configuration.
7. Press **Y**.

   The timeslot information is modified.

Note: *Connections are not enabled until you exit the Change Connection Screen and the connection is saved to the database. Until then, the new connection will not pass traffic.*

Field Descriptions

Refer to Table 6-1 for field descriptions for the Change Connection screen.

Map Definition

The Map Definition Menu allows you to assign a name and description to each of the three connection maps.

Navigation:
DNX-1u Main Menu ↓ Connection Maps ↓ Map Definition

Assigning a Map Name and Description

To assign a Map name and description, follow the procedure below.

1. From the DNX-1u Main Menu, select **Connection Maps**, **Map Configuration** and then **Map Definition**.

   The Definition Maps Menu is displayed.

Figure 6-23: *Definition Maps Menu*

```
System ID: default name Unit #1                                    Help = [?]
Sycamore Networks, Inc.           DNX-1u

                            Definition Maps Menu

             No.   Name         Description           Status
             ---   -----------  -------------------   ------
             01    Map 01       Map 01 description    Active
             02    Map 02       Map 02 description
             03    Map 03       Map 03 description
```

2. Move your cursor to the *Name* or *Description* field that you want to define and press **Enter**.
3. Enter the new name or description and press **Enter**.
4. Move to the next field, or if definitions are complete, press **X**.

   A message is displayed asking if you want to update the configuration.
5. Press **Y**.

   The map information is modified.

Trunk Conditioning Profile

Trunk conditioning is defined as the action of placing the signalling bits associated with a DS0 in a predictable state when an Out of Frame (OOF), Loss of Signal (LOS), or Yellow Alarm is detected in the T1 trunk.

These signalling bits are passed along to an attached piece of equipment to inform it there is a failure farther down the line. The particular actions for trunk conditioning are outlined in *Bellcore Technical Reference* TR-NWT-000170, *"Digital Cross-Connect System Generic Requirements and Objectives"*, dated January 1993. Basically, for the first 2.5 seconds the link is down, the value set in the Signalling Start field will be sent. After 2.5 seconds have elapsed, the value set in the Signalling End field is sent indefinitely. For the DNX-1u, up to 16 different trunk conditioning bit patterns (or "profiles") can be created using the Trunk Profile Configuration Menu and subsequently applied to one or more link timeslots.

Navigation:
DNX-1u Main Menu ↓ Connection Maps ↓ Trunk Conditioning Profile

Creating a Trunk Conditioning Profile

To create a Trunk Conditioning profile, follow the procedure below.

1. From the DNX-1u Main Menu, select **Connection Maps**, **Map Configuration** and then **Trunk Conditioning Profile**.

   The Trunk Profile Configuration screen is displayed.

Figure 6-24: *Trunk Profile Configuration Screen*

```
System ID: DNX-1u No. 1                                          Help = [?]
Sycamore Networks, Inc.          DNX-1u
                         Trunk Profile Configuration
     Trunk Profile ID   Signalling Start    Signalling End     Data
     ---------------------------------------------------------------
          1                  0xf                0xf          0x1a
          2                  0xf                0xf          0x1a
          3                  0xf                0xf          0x1a
          4                  0xf                0xf          0x1a
          5                  0xf                0xf          0x1a
          6                  0xf                0xf          0x1a
          7                  0xf                0xf          0x1a
          8                  0xf                0xf          0x1a
          9                  0xf                0xf          0x1a
          10                 0xf                0xf          0x1a
          11                 0xf                0xf          0x1a
          12                 0xf                0xf          0x1a
          13                 0xf                0xf          0x1a
          14                 0xf                0xf          0x1a
          15                 0xf                0xf          0x1a
          16                 0xf                0xf          0x1a

[Enter] to set trunk profile
E[x]it to update changes
```

2. Move the cursor to the Trunk Profile ID you want to configure and press **Enter**.

   The Individual Trunk Profile Creation screen is displayed.

Figure 6-25: *Individual Trunk Profile Creation Screen*

```
System ID: default name Unit #1                                  Help = [?]
Sycamore Networks, Inc.          DNX-1u

                       Individual Trunk Profile Creation


                      Index                  : 1
                      Signalling Start       : 0x0
                      Signalling End         : 0xf
                      Data Bits              : 0x1a









E[x]it
```

3. Set the parameters for this trunk conditioning profile. For information on these fields, refer to the following section *Field Descriptions*.
4. When complete press **X** to save and exit.

   A message is displayed asking if you want to update the configuration.
5. Press **Y**.

   The trunk condition information is created.

Field Descriptions

Table 6-9 lists the field descriptions for creating a trunk profile.
.

Table 6-9: *Trunk Conditioning Profile Parameters*

Field	Description
Index: *(display field)*	Displays the Trunk Profile ID Number, from *1* to *16* to identify up to 16 different Trunk Profiles.
Signalling Start: *(text field)*	Sets the value to be sent to the connected equipment for the first 2.5 seconds the link is down. Enter an equipment-specific hexadecimal number from *0-f* (default = *f*). Values are *0x00* to *0xf*. ***Note:*** *When using E1 multiframe CAS the ABCD bits are in TS16 are not robbed. As a result, a ABCD bit pattern of 0000 is changed to 0001 because the DNX-1u implements a recommendation from G.704. There are 16 multiframes 0 to 15, multiframe 0, TS 16 has frame alignment bit patterns and multiframes 1 - 15 TS 16 have the ABCD bits for TS 1-15 (lower nibble) and 17-31 (upper nibble). The ABCD value of 0000 is not allowed is because 0000 looks like the "lost multiframe" alignment pattern for MFAS in multiframe 0 and can cause frame alignment errors.*
Signalling End: *(text field)*	Sets the value that will be continually sent to the connected equipment after 2.5 seconds of the link being down. Enter an equipment-specific hexadecimal number from *0-f* (default = *f*) Values are *0x00* to *0xf*. ***Note:*** *When using E1 multiframe CAS the ABCD bits are in TS16 are not robbed. As a result, a ABCD bit pattern of 0000 is changed to 0001 because the DNX-1u implements a recommendation from G.704. There are 16 multiframes 0 to 15, multiframe 0, TS 16 has frame alignment bit patterns and multiframes 1 - 15 TS 16 have the ABCD bits for TS 1-15 (lower nibble) and 17-31 (upper nibble). The ABCD value of 0000 is not allowed is because 0000 looks like the "lost multiframe" alignment pattern for MFAS in multiframe 0 and can cause frame alignment errors.*
Data Bits: *(text field)*	Specifies a hexadecimal number from *0-ff* (default = *1a*). Values are *0x00* to *0xf*.

Section 7
Status and Diagnostics

Introduction

This section provides status and diagnostic information for all subsystems in the DNX-1u.

Navigation:
DNX-1u Main Menu ↓ Status and Diagnostics

Accessing Status and Diagnostics Information

1. From the DNX-1u Main Menu, click on **Status and Diagnostics**.

   The System Summary screen is displayed.

Figure 7-1: *System Summary Screen*

```
System ID: DNX-1u No. 1                                          Help = [?]
Sycamore Networks, Inc.           DNX-1u

                            Unit #1  System Summary

   ID                Type                 State            Alarm
---------      ----------------         ---------         ---------
T1E1-A         Quad T1/E1                Online             None
T1E1-B         Quad T1/E1                Online             None
ROUTER         Router                    Online             None
SYNC           High Speed Sync           Online             None
ASYN           Low Speed Async           Online             None
CONT           Contact Closures          Online             None
VOLT           Voltage Measure           Online             None
TEMP           Ambient Temp              Online             None
TCODER         Transcoder                Online             None
PS-A           Power                     Online             None
PS-B           Power                     Online             None



   [Enter]Subsystem Cfg      [C]lear Error Counters    [A]larm detail
```

2. From this screen you can obtain status and diagnostic information for all of the DNX-1u subsystems. To clear error counters press **C**. An message is displayed asking if you want to clear all error messages for all subsystems. Press “**Y**” to clear these error counters or “**N**” to cancel.
3. To view alarm detail for a specific subsystem, move your cursor to the selected subsystem and press **A**. Alarm information for the selected subsystem is displayed.

4. To select a subsystem, move your cursor to the selected subsystem and press **Enter**. The specific subsystem status screen is displayed.

T1E1 Subsystem

The T1/E1 Status and Diagnostics Menus provide access to several embedded diagnostic facilities, including a mix of T1/E1 loopbacks, built-in BERT, and viewing additional statistics. These provide the user with the ability to perform additional diagnostics to facilitate installation and troubleshooting activities both locally and remotely.

Navigation:
DNX-1u Main Menu ↓ Status and Diagnostics ↓ Select T1E1-A or T1E1-B

Viewing T1/E1 Alarm Detail Information

To view T1/E1 alarm detail information, follow the procedure below.

1. From the System Summary screen move your cursor to **T1E1-A** or **T1E1-B** and press **A**.

   The Quad T1E1 Alarm Information screen is displayed.

Figure 7-2: *Quad T1E1 Alarm Information Screen*

```
System ID: DNX-1u No. 1                                          Help = [?]
Sycamore Networks, Inc.           DNX-1u
                         Quad T1E1 Alarm Information

    Subsystem: T1E1-A   Configured Type: Quad T1/E1
                                  ----Critical Alarms------
Subsystem........: Online         Subsystem Module......: Present
Clock Source.....: No
In Test..........: No
Error Indicator..: Yes





                    Port Alarm Information

01=None     02=None     03=None     04=None
```

2. Press **Esc** to exit out of this screen return to the System Summary screen.

Viewing T1E1 Subsystem Information

Note: *The examples below are for a system with the APS Feature Option Key enabled.*

To view T1E1 status information, follow the procedure below.

1. From the System Summary screen select **T1E1-A** or **T1E1-B**.

   The selected T1E1 Status Diagnostics Menu is displayed.

Figure 7-3: *T1/E1 Status and Diagnostics Menu*

```
System ID: DNX-1u No. 1                                          Help = [?]
Sycamore Networks, Inc.           DNX-1u

                       T1/E1 Status and Diagnostics Menus
                       ----------------------------------


                            View Configuration
                            Diagnostics
```

2. To view configuration information click on **View Configuration**.

   The T1E1 Configuration screen is displayed.

3. To check on the status or a specific link, move your cursor to that link and press **Enter**.

   The T1E1 Link Configuration screen for the link you selected is displayed.

Figure 7-4: *View Individual T1/E1 Link Configuration Display*

```
System ID:                                                          Help = [?]
Sycamore Networks, Inc.           DNX-1u

                   Unit #1   T1E1-A    Link Configuration

                   Link Number..........: 1
                   Name................: Link 01
                   Status..............: Out of Service
                   Cross-connect Mode...: 1-0
                   Line Type...........: T1 ESF B8ZS
                   Recover Time........: 3 seconds
                   Network Loop........: Disabled
                   Tx Yel Alm/RAI......: No
                   Unused TS...........: Busy
                   ESF format..........: 54016
                   Line Build Out......: 0.0db <> Long Haul
                   Rx Mode.............: Normal
                   Rapid Trunk Condition: Disable
                   APS Fields..........: Unprotected
                   Function............: Normal
                   Threshold Profile Id.: 1
```

Field Descriptions

Table 7-2 lists the field descriptions for the T1/E1 Link Configuration screen.

Table 7-1: *T1/E1 Link Configuration Field Descriptions*

Field	Description
	LINK FIELDS
Link Number: *(display field)*	Displays the link number (*1* through *4*).
Name: *(display field)*	Displays the name of the link, entered from the Configuration Menu.
Status: *(display field)*	Displays the current status of the T1 or E1 link. The choices are: • *AIS* - Alarm Indication Signal. Set when fewer than three zero bits are received in 512 consecutive bits or, optionally, in each of two consecutive periods of 512 bits. • *CFA* - Change of Frame Alignment declared each time the offline framer generates a reframe pulse that aligns the receiver time base to a new bit position. • *ERR* - Undetermined error type or more than one of the above/below errors present. • *LOF* - Loss of Frame: Receive Loss Of Frame is declared when 3 consecutive FASs have been received in error or, additionally, if bit 2 of NFAS frames is in error for 3 consecutive occasions. • *LOS* - Loss of Signal: declared if 32 contiguous zeros have been received. • *OK* - Link is In Service and functioning properly. • *OOS* - Link is Out of Service.

Table 7-1: *T1/E1 Link Configuration Field Descriptions (Continued)*

Field	Description
Status cont...: *(display field)*	• *RED* - Red Alarm or Carrier Fault Alarm declared when an out-of-frame condition is present for 2.55 sec (± 40 ms). • *RSLP* - Receive Slip: Controlled slip is detected on the incoming path. • *SEF* - Severely Errored Frame is reported when the receive signal does not meet requirements of ANSI T1.231. • *SLIP* - Slip is detected in both the incoming and outgoing paths. • *TSLP* - Transmit Slip: Controlled slip is detected on the outgoing path. • *YEL* - Yellow Alarm: For T1, declares a Yellow Alarm when the Yellow pattern is received for 425 ms (± 50 ms). For E1, declared when an Alarm Indication is received using TS-0 overhead (E1).
Cross-connect Mode *(display field)*	Determines the Cross-Connect Mode for the link, the choices are: • *1-0*: One-Zero Mode (Channelized T1/E1). Framing is terminated and regenerated. Uses standard framing pattern and detects all alarms/errors. Clear Mode is turned off. All diagnostic functions are available. • *1-1 Framed*: One-One Mode Framed: Monitored full T1 (25 DS0s) or full E1 (32 DS0s). Framing is conveyed through the switch fabric. Allows alarms and statistics to be displayed. • *1-1 Unframed*: One-One Mode Unframed: Full T1 (25 DS0s) or E1 (32 DS0s). Full bandwidth of the frame is used for data. Passes data without keeping track of alarms and statistics. Limited diagnostics functions are available
Line Type: *(display field)*	Displays the type of framing used on the line. The available line types are dependent upon the cross-connect mode selected. The choices are: • *T1 ESF B8ZS* (1-0 and 1-1 Framed Modes) • *T1 ESF AMI* Density (1-0 and 1-1 Framed Modes) • *T1 ESF AMI* (1-0 Mode) • *T1 D4 B8ZS* (1-0, and 1-1 Framed Modes) • *T1 D4 AMI* (1-0 Mode) • *T1 D4 AMI* Density (1-0, and 1-1 Framed Modes) • *T1 B8ZS* (1-1 Unframed Mode) • *T1 AMI* (1-1 Unframed Mode) • *E1* (1-0, 1-1 Framed, and 1-1 Unframed Modes) • *E1-CRC* (1-0 and 1-1 Framed Modes) • *E1-CAS* (1-0 and 1-1 Framed Modes) • *E1 CAS-CRC* (1-0 and 1-1 Framed Modes)
Recover Time: *(display field)*	Displays the time Red/Yellow alarms are cleared following the recovery of the given T1 facility. For example, a valid signal and framing present. The choices are: *0*, *3*, *10*, or *15* seconds. ***Note:*** *The Recover Time option field is displayed only with T1 line types.*
Network Loop: *(display field)*	Displays the type of diagnostic loop enabled. If *Off* is displayed no loop is enabled.
Tx Yel Alm/RAI: *(display field)*	A *Yes* will cause a T1 circuit to discard data and send a Yellow alarm if it is in a Red alarm condition for the number of seconds selected in the Recover Time field. ***Note:*** *The Yellow Alarm is not transmitted upstream in clear T1 mode (framed or unframed) whether this parameter is set to Yes or No.*

Table 7-1: *T1/E1 Link Configuration Field Descriptions (Continued)*

Field	Description
Unused TS: *(display field)*	Displays the state of unused timeslots The choices are: • *Idle* - The hex value 7F (01111111) is sent. • *Busy* - The hex value FF (11111111) is sent.
ESF Format: *(display field)*	Displays the type of T1 ESF network commands to which the T1 port will respond. It is not applicable to D4 networks. With ESF networks, this information must be obtained from the network supplier. The choices are: • *54016 (*AT&T Technical Reference 54016) • *T1.403* (ANSI specification T1.403). ***Note:*** *The ESF Format option field is available only with T1 line types.*
Line Build Out: *(display field)*	Displays the line attenuation level. It should be set to *0 dB* (no attenuation) unless the network supplier specifically requests otherwise. The choices are: • *0.0db <> Long Haul* • *7.5db <> Long Haul* • *15.0db <> Long Haul* • *22.5db <> Long Haul* • *0-133 Ft. <> Short Haul* • *133-266 Ft. <> Short Haul* • *266-399 Ft. <> Short Haul* • *399-533 Ft. <> Short Haul* • *533-655 Ft. <> Short Haul* ***Note:*** *The Line Build Out option field is available only with T1 line types.*
Rx Mode: *(display field)*	Displays the Rx Mode configured link to meet special situational needs. The values listed below are for a T1 Link. For an E1 Link the default selection is denoted as Normal and is not configurable. The choices are: • *Normal* - Used for hot signals with improved Rx Sensitivity and is used frequently. • *Special1* - Used for hot signals with limited Rx Sensitivity for unusually strong signals. • *Special2* - Used in special cases for hot signals with improved Rx Sensitivity. ***Note:*** *The Rx Mode option field is available only with T1 line types.*
Rapid Trunk Condition: *(display field)*	Displays the Rapid Trunk Conditioning state, either *Enable* or *Disable*.
APS Fields	
Function: *(display field)*	Displays the function of the link. The choices are: • *Unprotected* - A link not configured for APS • *Working* - The primary link that carries traffic • *Protection* - The backup link that will be switched to when the Working Link is non-operational
Threshold Profile Id: *(display field)*	Displays the profile configured using the Link APS Threshold Profiles Menu. These profiles are used to set the conditions that need to be met to initiate a link switchover.
Protection Link: *(display field)*	Displays the link to protect the Working Link should a failure occur.

Viewing Diagnostic Information

The Diagnostics Manager is used to set up line diagnostics for the DNX-1u T1/E1 links.

To view T1E1 diagnostic information, follow the procedure below.

1. From the T1/E1 Status and Diagnostics Menu screen select **Diagnostics**.

   The Diagnostics Menu is displayed.

2. From this screen you can view line diagnostics by selecting **Line Diagnostics Center**.

   The Diagnostics Manager screen is displayed.

Figure 7-5: *Diagnostics Manager Screen (Normal Configuration)*

```
System ID:                                                          Help = [?]
Sycamore Networks, Inc.           DNX-1u
                                Diagnostics Manager
Subsystem ID: T1E1-A            -------------------
                 T1        T1      Loop     Bkpln   BERT     BERT       BERT
# Link Name      State     ErrSecs back     Loop    State    Duration   ErrSecs
-+--------------+---------+-------+--------+-------+--------+----------+--------
1 Link 01        Inactive  0       Off      Off     Off      0          0
2 Link 02        Inactive  0       Off      Off     Off      0          0
3 Link 03        Inactive  0       Off      Off     Off      0          0
4 Link 04        Inactive  0       Off      Off     Off      0          0





[B]ert   [L]oop  [E]xpose  [C]lear Error Counters
ESF [S]tatistics    15-min Performance [R]egisters    [G].826

---------------------  Insert an error  ----------------------
[1]PRGD
```

Figure 7-6: *Diagnostics Manager Screen for APS Configuration (T1 Example)*

```
System ID: DNX-1u No. 1                                          Help = [?]
Sycamore Networks, Inc.           DNX-1u
                               Diagnostics Manager
Subsystem ID: T1E1-A           -------------------
                 T1        T1      Loop     Bkpln   BERT     BERT       BERT
# Link Name      State     ErrSecs back     Loop    State    Duration   ErrSecs
-+--------------+---------+-------+--------+-------+--------+----------+--------
1 Link 01        OK        3       Off      Off     Off      0          0
2 Link 02        OK        3       Off      Off     Off      0          0
3 Link 03        Inactive  0       Off      Off     Off      0          0
4 Link 04        Inactive  0       Off      Off     Off      0          0





[B]ert   [L]oop  [E]xpose  [C]lear Error Counters
ESF [S]tatistics    15-min Performance [R]egisters    [G].826
A[P]S Statistics    [A]PS View
---------------------  Insert an error  ----------------------
[1]PRGD
```

3. From this screen you can perform additional diagnostic actions, such as **B**ERT, **L**oopbacks, **E**xposing additional statistics, **C**learing Error Counters, E**S**F Statistics, 15-min Performance **R**egisters, or **G**.826 statistics. The information contained in each field on the Diagnostics Manager Menu is detailed in Table 7-2.

Note: *As noted in Table 7-2, some of the fields described are for APS configuration only. These fields will not be displayed on any of the other Diagnostics Manager menus.*

Field Descriptions

Table 7-2 lists the field descriptions for the Diagnostics Manager screen.

Table 7-2: *Diagnostics Manager Field Descriptions*

Field	Description
LINK FIELDS	
#: *(display field)*	Displays the link number (*1* through *4*).
Link Name: *(display field)*	Displays the name of the link, entered from the Configuration Menu.
T1 or E1 State: *(display field)*	Displays the current status of the T1 or E1 link. The choices are: • *AIS* - Alarm Indication Signal. Set when fewer than three zero bits are received in 512 consecutive bits or, optionally, in each of two consecutive periods of 512 bits. • *CFA* - Change of Frame Alignment declared each time the offline framer generates a reframe pulse that aligns the receiver time base to a new bit position. • *ERR* - Undetermined error type or more than one of the above/below errors present. • *LOF* - Loss of Frame: Receive Loss Of Frame is declared when 3 consecutive FASs have been received in error or, additionally, if bit 2 of NFAS frames is in error for 3 consecutive occasions. • *LOS* - Loss of Signal: declared if 32 contiguous zeros have been received. • *OK* - Link is In Service and functioning properly. • *OOS* - Link is Out of Service. • *RED* - Red Alarm or Carrier Fault Alarm declared when an out-of-frame condition is present for 2.55 sec (± 40 ms). • *RSLP* - Receive Slip: Controlled slip is detected on the incoming path. • *SEF* - Severely Errored Frame is reported when the receive signal does not meet requirements of ANSI T1.231. • *SLIP* - Slip is detected in both the incoming and outgoing paths. • *TSLP* - Transmit Slip: Controlled slip is detected on the outgoing path. • *YEL* - Yellow Alarm: For T1, declares a Yellow Alarm when the Yellow pattern is received for 425 ms (± 50 ms). For E1, declared when an Alarm Indication is received using TS-0 overhead (E1).
T1 or E1 ErrSecs: *(display field)*	Displays the number of errored seconds that occurred on the T1 or E1 link since the last time the counter was reset. The occurrence of a Loss of Frame, CRC6 or CRC4 error in a one-second period is known as an errored second.
Loopback: *(display field)*	Displays the type of diagnostic loop enabled. If *Off* is displayed no loop is enabled.
Bkpln Loop: *(display field)*	*On* displayed in this field indicates that a backplane loop is enabled.

Table 7-2: *Diagnostics Manager Field Descriptions (Continued)*

Field	Description
BERT FIELDS	
BERT State: *(display field)*	Displays the type of BERT currently enabled. If BERT is not enabled, *Off* is displayed. See "Bit Error Rate Test (BERT)" on page 7-12 for a list of the possible displayed states.
BERT Duration: *(display field)*	Displays the amount of time (in seconds) a BERT is enabled.
BERT ErrSecs: *(display field)*	Displays the number of errored seconds that occurred since BERT was enabled.
OPTION KEYS	
[B]ERT: *(option selection)*	Selecting **B** opens the BERT Selection Menu, which allows you to set up Bit Error Rate Testing for the selected link. See "Bit Error Rate Test (BERT)" on page 7-12 for details.
[L]oop: *(option selection)*	Selecting **L** opens the Loopback Selection Menu, which allows you to set up diagnostic loopbacks for the selected link. See "T1/E1 Loopbacks" on page 7-15 for details.
[E]xpose: *(option selection)*	Selecting **E** opens the Link Status (Expose) Display, which is used to display the status of the T1/E1 links, access G.826 statistics, access ESF statistics, access 15-min Performance Registers, reinitialize the framer, and insert errors for diagnostic purposes.
[C]lear Error Counters: *(option selection)*	Selecting **C** will clear the error counters for all links. See "Clearing Counters for all T1/E1 Links" on page 7-21 for details.
ESF [S]tatistics: *(option selection)*	Selecting **S** allows you to view ESF Statistics for the selected link. See "Viewing ESF Statistics" on page 7-26 for details.
15-min Performance [R]egisters: *(option selection)*	Selecting **R** allows you to view 15-Minute Performance Registers for the selected link. See "Viewing 15-Minute Performance Registers" on page 7-28 for details.
[G].826: *(option selection)*	Selecting **G** allows you to view G.826 Statistics for the selected link. See "Viewing G.826 Statistics" on page 7-29 for details.
A[P]S Statistics: *(option selection)*	For APS Configuration only. Selecting **P** allows you to view APS statistics for the selected link. See "Viewing APS Statistics" on page 7-21 for details.
[A]PS View: *(option selection)*	For APS Configuration only. Selecting **A** allows you to show the APS view for the selected link. See "Selecting an APS View" on page 7-24 for details.
ERROR INSERTION KEY	
[1]PRGD (Pseudo-Random Generator Detector): *(option selection)*	Selecting **1** allows you to insert a single bit error on the selected link for diagnostic purposes. See "Inserting Errors" on page 7-30 for instructions on how to use this feature.

Bit Error Rate Test (BERT)

BERT is used to test the bit error rate of a communication circuit. The device checks for errors by comparing a received data pattern with a known transmitted data pattern to determine transmission line quality. If a pattern match cannot be found, Errored Seconds (ES) counts are incremented to record the time during which a pattern lock in the receive path could not be established. For troubleshooting purposes, combining BERT with diagnostic loops is very useful in isolating problems within a circuit. There are five available BERT patterns for the T1/E1 links toward the system and seven available BERT patterns towards the link.

Note: *The source port for a BERT must be in an error free state in order to obtain valid results. The port can be placed in local loopback in order to generate the BERT.*

A valid link must be available in order to substitute a BERT pattern for system-side testing. If no T1 link is available on the port generating the test pattern, the port must be placed in local loopback to generate correct test results.

T1/E1 Bit Error Rate Testing

In addition to providing individual port-level loopbacks, independent system- and link-facing bit error rate test generators/detectors are provided to support full T1/E1-level diagnostics which are performed on an errored second basis (not individual bit error measurement).

Figure 7-7: *T1/E1 Bit Error Rate Test*

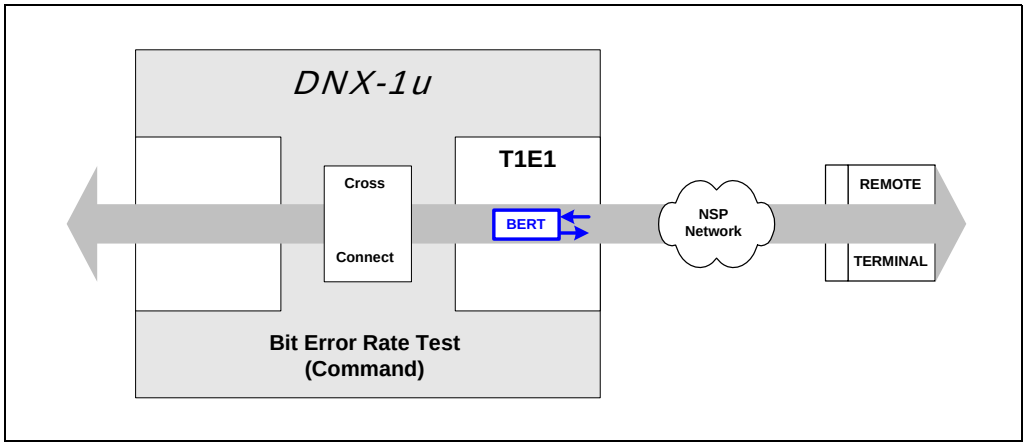

Initiating T1/E1BERT

To set up Bit Error Rate Testing (BERT) for a selected link, follow the procedure below.

1. From the Diagnostics Manager screen, press **B** to set up BERT.

   The Bit Error Test (BERT) Selection screen is displayed.

Figure 7-8: *BERT Selection Menu*

```
System ID: DNX-1u No. 1                                          Help = [?]
Sycamore Networks, Inc.           DNX-1u
                       Bit Error Test (BERT) Selection
                       -------------------------------
                   Link Number..: 1
                   Link Name....: Link 01
                   Current BERT.: Off
                   New BERT.....: Off


--- To System ------------------------ To Link-------------
[2] Sys Framed 2047                [B] Framed 2047
[3] Sys Framed 2^15                [C] Framed 2^15
[4] Sys Framed 2^20                [D] Framed 2^20
[5] Sys Framed QRSS                [E] Framed QRSS
[6] Sys Framed 2^15 inverted       [F] Framed 2^15 inverted
[O]ff                              [G] Framed All Zeros
                                   [H] Framed All Ones
```

2. Select a BERT pattern by placing your cursor on the *New BERT* field and press **Enter** to cycle through the choices or press the specific *hot key* indicated on the bottom of the menu. The selectable patterns and their corresponding *hot keys* are as follows:

Table 7-3: *BERT Selections*

Option	Description
T1/E1 BERT	
[2]	Framed 2047 towards the system
[3]	Framed 2^15 towards the system
[4]	Framed 2^20 towards the system
[5]	Framed QRSS towards the system
[6]	Framed 2^15 inverted towards the system
[B]	Framed 2047 towards the link
[C]	Framed 2^15 towards the link
[D]	Framed 2^20 towards the link

Table 7-3: *BERT Selections (Continued)*

Option	Description
[E]	Framed QRSS towards the link
[F]	Framed 2^15 inverted towards the system
[G]	Framed All Zeros (0x00)
[H]	Framed All Ones (0xFF)
Other Selections	
[O]	Off

Note: *When using a combination line type of and a selected BERT pattern, all patterns should work with B8ZS; however, only shorter patterns work with AMI. For example, selecting PRBS 2047 BERT in using the AMI Mode.*

3. Press **X** to start the test.

Using BERT in AMI Mode

Performing BERT testing using AMI is used to verify the correct operation and configuration. The tests should be performed end-to-end using framed patterns in order to test all network equipment. Some of tests will detect equipment as mis-optioned for B8ZS. BERT patterns with shorter strings of zeros should be used.

Stopping T1/E1 BERT

To stop Bit Error Rate Testing (BERT) for a selected link, follow the procedure below.

1. From the Diagnostics Manager screen, press **B**.

   The Bit Error Test (BERT) Selection screen is displayed.
2. Move your cursor to the *New BERT* field, press **O**.
3. Press **X** to stop the test.

   A message is displayed asking if you want to stop the test.
4. Press **Y** to stop the test and return to the Diagnostics Manager Menu or press **N** to cancel and return to the BERT Selection submenu.

T1/E1 Loopbacks

T1/E1 Diagnostic Loopbacks for the DNX-1u include several types of Network Interface Loopbacks (Local, Line, Remote, Payload and User-Defined) as well as a Backplane Loopback. Each of the links can be independently looped back. Loopbacks are enabled from the Loopback Selection Menu.

CAUTION

When a receiving timing reference from a T1/E1 port that is subsequently placed into diagnostic loopback, a secondary clock source should be configured. Failure to do so will result in the DNX-1u dropping the clock source in loopback and utilizing Free Run timing, which will result in clock slips.

Setting up a Loopback

To set up a loopback a selected link, follow the procedure below.

1. From the Diagnostics Manager screen, press **L** to set up a loopback.

   A loopback selection screen is displayed.

Figure 7-9: *Loopback Selection Screen*

```
System ID: DNX-1u No. 1                                          Help = [?]
Sycamore Networks, Inc.          DNX-1u

                                  Link: 1



                            Current Loopback.: Off
                            New Loopback.....: Off
                            Backplane Loop...: Off









NI Loop Type  :  [O]ff   [L]ocal  Li[n]e  [R]emote  [P]ayload
                 [U]ser Defined
Backplane Loop:  [T]oggle
```

2. Select a specific loop by pressing the specific key indicated on the bottom of the menu.
3. After you select a loop, press **X** to enable it.

   A message is displayed asking if you want to process the loop command.
4. Press **Y** to initiate the loop.
5. You are returned to the Diagnostics Manager Menu.

Field Descriptions

Table 7-4 lists the field descriptions for T1/E1 loopbacks.

Table 7-4: *T1/E1 Loopbacks*

Loop	Description
Local Loopback	The most fundamental diagnostic is a T1 or E1 local loopback that operates as follows: • Entire payload including any associated signalling information is returned toward the DNX-1u resident cross-connect switching fabric; • Transmit T1 or E1 port outgoing traffic is not disrupted; and • Receive T1 or E1 port incoming traffic is disrupted (no link alarm conditions initiated). This diagnostic capability is accessible by using DNX-1u management interfaces, such as the Craft terminal port and Telnet session, or SNMP, ENvision EMS or ENvision Plus NMS. **Figure 7-10:** *Local Loopback* 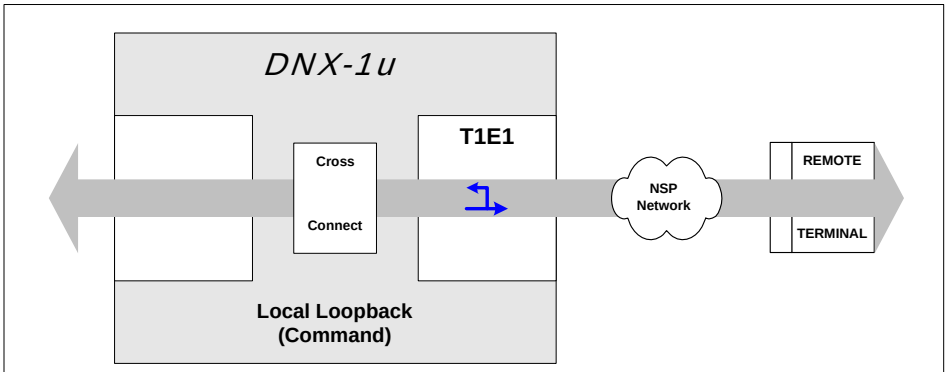
Line Loopback	Performed within the framer for a the given port under test as follows: • Line (framing and payload) loopback is established toward the distant end while passing the received data and remote code generator is removed. • Upon completion of the testing the line loopback is removed. An option is provided to prevent line loopbacks being performed in response to network initiated codes. This diagnostic capability is accessible using DNX-1u management interfaces, such as a Craft terminal port and Telnet session, SNMP, ENvision EMS and ENvision Plus NMS. **Figure 7-11:** *Line Loopback* 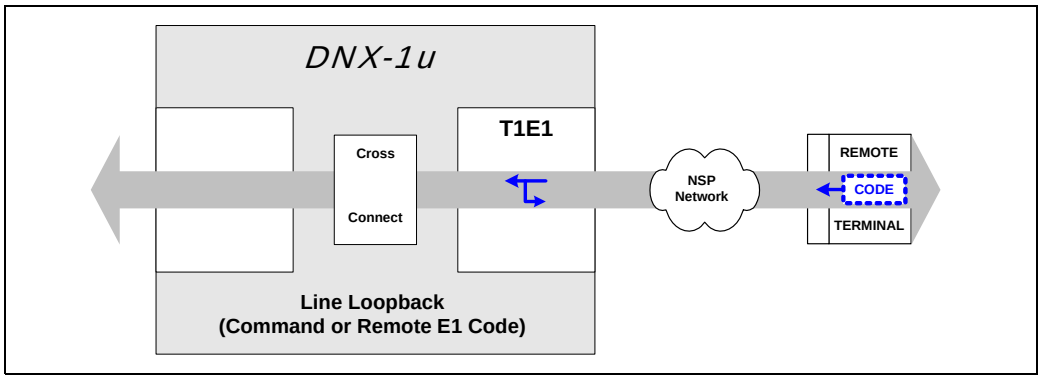

Table 7-4: *T1/E1 Loopbacks (Continued)*

Loop	Description
Remote Loopback (T1 only)	Performed within the remote terminal equipment in response to a DNX-1u launched T1 loopback code as follows: • Line Loop-up code is launched using a port over link toward remote terminal equipment; • Once distant line loopback is established, code generator is removed from the path; and • Upon completion of the testing, the appropriate loop-down code is launched toward the remote terminal until the distant line loopback is removed. This diagnostic capability is accessible of using DNX-1u management interfaces, such as a Craft terminal port and Telnet session, or SNMP, ENvision EMS or ENvision Plus NMS. **Figure 7-12:** *Remote Loopback* 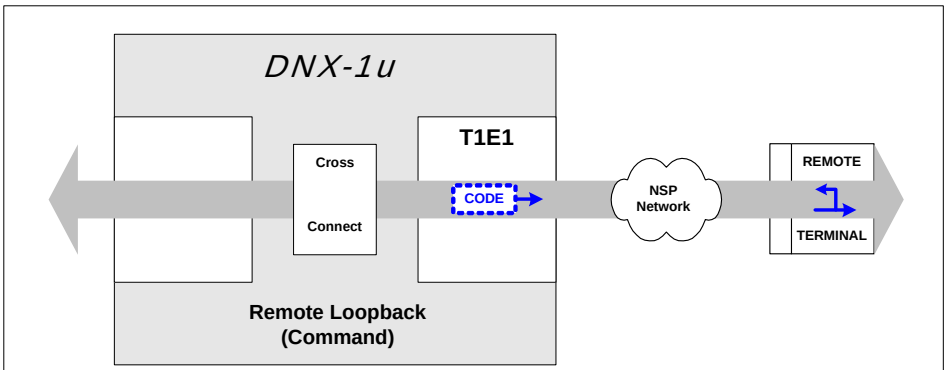
Payload Loopback	Performed within the framer for the given port under test as follows: • Only the payload and not the received framing information is returned toward the T1 or E1 port; and • Receive T1 or E1 port incoming traffic is disrupted. This diagnostic capability is accessible using DNX-1u management interfaces, such as a Craft terminal port and Telnet session, SNMP, ENvision EMS, or ENvision Plus NMS. **Figure 7-13:** *Payload Loopback* 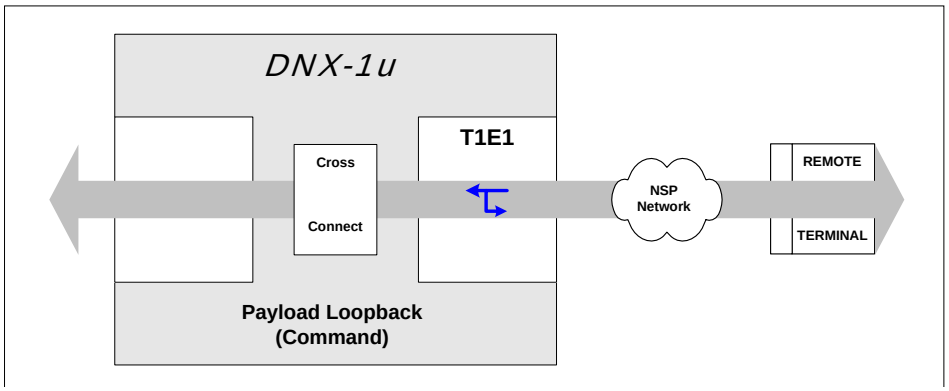
User-Defined Loopback (T1 Only)	Similar to a Remote Line Loopback. It allows the user to place remote equipment into loopback by sending a proprietary code to the equipment. The proper code needs to be obtained from the remote equipment's manufacturer or operator. Various elements of the code can be defined, such as the length and value for both the activate and deactivate code.

Table 7-4: *T1/E1 Loopbacks (Continued)*

Loop	Description
User-Defined Loopback (T1 Only) continued...	A loopback is then performed within the remote terminal equipment in response to a DNX-1u launched T1 loopback code as follows: • Customized Line Loop-up code is launched using a port over link toward remote terminal equipment; • Once distant line loopback is established, code generator is removed from the path; and • Upon completion of the testing, the appropriate customized loop-down code is launched toward the remote terminal until the distant line loopback is removed. This diagnostic capability is accessible using DNX-1u management interfaces, such as a Craft terminal port and Telnet session, or SNMP, ENvision EMS or ENvision Plus NMS. **Figure 7-14:** *User-Defined Loopback* 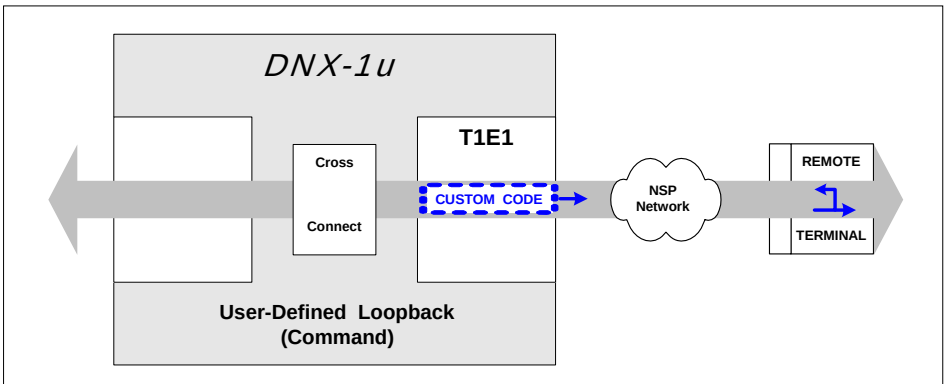
Backplane Loop	Performed using the midplane cross-connect switching fabric as follows: • Entire payload including any associated signalling information (plus framing information for Clear E1 Framed applications) is returned toward T1 or E1 port; and • Receive T1 or E1 port incoming traffic is not disrupted. This diagnostic capability is accessible using DNX-1u management interfaces, such as a Craft terminal port and Telnet session, or SNMP, ENvision EMS or ENvision Plus NMS. **Figure 7-15:** *Backplane Loopback* 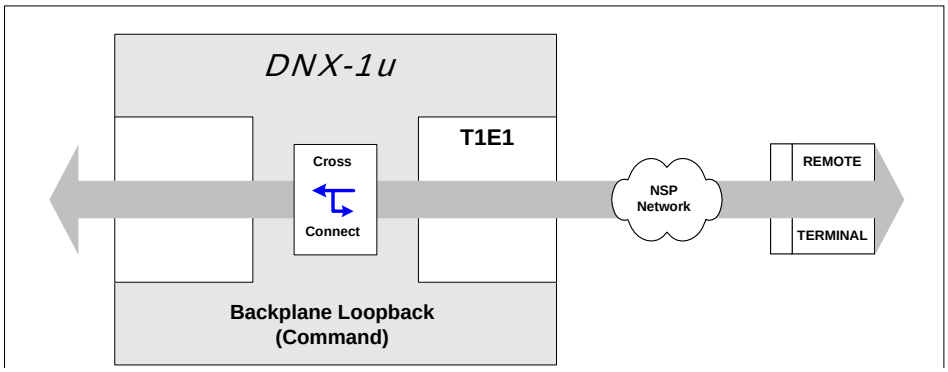
Off	No loopbacks are enabled.

Special Instructions for User-Defined Loop

A User-Defined Loop allows you to place remote equipment into loopback by sending a specific code to the equipment. The proper code needs to be obtained from the remote equipment's manufacturer or operator. Several elements of the code can be defined, such as the length and value for both the activate and deactivate code.

To set up a User-Defined Loop, follow the procedure below.

1. From the Loop Selection Menu, press **U** (hot key).
2. Press **X** to select the loop.

   The User Defined Loop parameter selection fields are displayed.

Figure 7-16: *User Defined Loop Select Screen*

```
System ID: DNX-1u No. 1                                          Help = [?]
Sycamore Networks, Inc.          DNX-1u

                                  Link: 1
                            Loop Selection Screen
                            ---------------------
                            Link Loop Type : U Def
                            Backplane Loop : Off



                                   Length         Value
                                   ------         -----
                    Activate Code..: 5 bits        00001000
                    Deactivate Code: 3 bits        00100000
                    Unframed.......: Yes

Notes: - Loop code uses 3,4,5,6,7 or 8 high order bits of the code value.
       - Bit 7 is transmitted first.
       - Unframed code overwrites the framing bits.
```

3. Enter the remote loopback codes as specified by the remote equipment's manufacturer or operator. Refer to *Field Descriptions* for additional information.

Note: *You must configure the corresponding activate and deactivate codes prior to activating the loop, otherwise the loop will not be activated.*

4. Once the parameters of the loop are defined, press **X** to save and activate the loop command.
5. A message is displayed asking if you want to process the loop command.
6. Press **Y** to send the loop command to the remote equipment.

Field Descriptions

Table 7-5 lists the field descriptions for User-Defined Loops.

Table 7-5: *User-Defined Loop Field Descriptions*

Field	Description
Activate Code - Length: *(option field)*	Specifies the length of the code needed to activate a remote loop. The choices are: *4*, *5*, *6* or *7* bits. The default is *5* bits.
Activate Code - Value: *(text field)*	Specifies the binary code needed to activate a remote loop. The default is *00001000*.
Deactivate Code - Length: *(option field)*	Specifies the length of the code needed to deactivate a remote loop. The choices are: *4*, *5*, *6* or *7* bits. The default is *6* bits.
Deactivate Code - Value: *(text field)*	Specifies the binary code needed to deactivate a remote loop. The default is *00100100*.
Unframed: *(option field)*	Select *Yes* if the loopback command can over-write the framing bits, or *No* if it cannot.

Special Instructions for Backplane Loop

A Backplane Loop is designed to check the integrity of the Backplane and allow testing through the T1/E1 port from the remote side to the backplane and back to the tester.

To set up a Backplane Loop for a, follow the procedure below.

1. From the loopback Selection Menu, press **T** to toggle the backplane loop *On* or *Off*.
2. Press **X** to enable the Backplane Loop.

   A message is displayed asking if you want to process the loop command.
3. Press **Y** to initiate the Backplane Loop.

Note: *There must be a connection mapped to another subsystem or to the T1/E1 Subsystem in order for the Backplane Loop to function.*

Clearing Counters for all T1/E1 Links

To clear counters for all T1/E1 links, follow the procedure below.

From the Diagnostics Manager screen, press **C** to clear all error counters for all T1/E1 links.

Note: *There are no prompts for clearing the counters. All counters are cleared immediately.*

Clearing Counters for a Specific T1/E1 Link

The *Expose* function is used to display the status of the T1/E1 links, access G.826 statistics, access ESF statistics, access 15-min Performance Registers, reinitialize the framer, and insert errors for diagnostic purposes.

To clear counters for a specific T1/E1 link, follow the procedure below.

1. From the Diagnostics Manager screen, press **E** to access the Link Status Screen.

   The Link Status screen is displayed.

2. Press **C** to clear a counter for a specific link.

   A message is displayed asking if you clear the link counter.

3. Press **Y**.

   The selected link counter is cleared.

Note: *If you do not first press **E** (Expose) for the individual link before pressing **C** (Clear Counters), ALL link counters will be cleared.*

Some of the fields are context sensitive. For example, the CRC errors only display for links that support CRC, such as T1 ESF or E1 CRC. An error-free link will display zeroes in all counter fields.

Viewing APS Statistics

The APS Statistics Display provides APS performance statistics for a given T1 or E1 link for the duration of time the link is up and running.

To view APS statistics, follow the procedure below.

1. From the Diagnostics Manager screen, move your cursor to the link you want to view statistics for and press **E** to access Link Status screen.

   The Link Status screen is displayed.

2. Press **P** to view APS statistics.

   The Link APS Statistics for the selected link are displayed.

Figure 7-17: *Link APS Statistics Screen*

```
System ID: DNX-1u No. 1                                          Help = [?]
Sycamore Networks, Inc.          DNX-1u

                             Link APS Statistics
                             -------------------
Link #...........: 1

Conditional State: Link Up            Link Down Due To Hard Fault: No
  Link Up........: 1                    Hard Fault CES...........: 6
  Link Down/CHFes: 0                    Hard Fault CEFS..........: 1055941
  Link Down/CSFes: 0                    AIS Detected.............: 0
  Link Recovering: 1                    Yellow Detected..........: 0
Operational State: Standby            Link Down Due To Soft Fault: No
  Online.........: 1                    Soft Fault SES...........: 1
  Standby........: 1                    Soft Fault CSES..........: 0
  Offline........: 2                    Soft Fault CEFS..........: 1055946
Revertive State..: Up                 APS Configuration Error....: None
  Revertive Up...: 1
  Revertive Down.: 1



E[x]it  [C]lear Counters
```

3. The Link APS Statistics Display is a read-only screen. The only action that can be accomplished here is pressing **C** to clear the counters.

Field Descriptions

Table 7-6 lists the field descriptions for link APS statistics.

Table 7-6: *Link APS Statistics Field Descriptions*

Field	Description
Link #: *(display field)*	Displays the number of the T1/E1 link for which the status is being presented.
Conditional State: *(display field)*	Displays the conditional state of the APS link, either: • *Link Up* - The link is in service and operational. • *Link Down* - The link is out of service. • *Recovering* - The link is recovering from a down state.
Link Up: *(display field)*	Displays the number of changes to a *Link Up* conditional state since the last counter reset.
Link Down/CHFes: *(display field)*	Displays the number of changes to a *Link Down* conditional state, resulting from Consecutive Hard Fault Errored Seconds since the last counter reset.
Link Down/CSFes: *(display field)*	Displays the number of changes to a *Link Down* conditional state, resulting from Consecutive Soft Fault Errored Seconds since the last counter reset.
Link Recovering: *(display field)*	Displays the number of changes to a *Recovering* conditional state since the last counter reset.

Table 7-6: *Link APS Statistics Field Descriptions (Continued)*

Field	Description
Operational State: *(display field)*	Displays the operational state of the APS link, either: • *Online* - The link is online. • *Offline* - The link is out of service. • *Standby* - The link is offline since last counter reset.
Online: *(display field)*	Displays the number of changes to an *Online* operational state since the last counter reset.
Standby: *(display field)*	Displays the number of changes to a *Standby* operational state since the last counter reset.
Offline: *(display field)*	Displays the number of changes to an *Offline* operational state since the last counter reset.
Revertive State: *(display field)*	Displays the status of Revertive Mode relative to the revertive threshold, either: • *Up* - APS revertive state of the working link is declared up because the link has met the revertive threshold as defined by the APS threshold profile. The Working link is eligible to be restored if Revertive Mode is enabled. • *Down* - APS revertive state of the working link is declared down because the link has not met the revertive threshold as defined by the APS threshold profile. The traffic on the Protection Link will not switch back to the Working Link. ***Note:*** *This is only an indication of the state the link is in relative to the revertive switchover criteria as defined by the APS threshold profile. Revertive switchover to the Working Link will only occur when Revertive Mode is enabled and revertive threshold criteria is met.*
Revertive Up: *(display field)*	Displays the number of times the link has met the revertive threshold for reverting back to the Working Link from the Protection Link. ***Note:*** *This is only an indication the link has met the switchover criteria as defined by the APS threshold profile. Switchover will only occur when Revertive Mode is enabled.*
Revertive Down: *(display field)*	Displays the number of times the link has met the revertive threshold for switchover to the Protection Link from the Working Link. ***Note:*** *This is only an indication the link has met the switchover criteria as defined by the APS threshold profile. Revertive switchover back to the Working Link will only occur when Revertive Mode is enabled.*
Link Down Due To Hard Fault: *(display field)*	Indicates whether the link has a hard fault or not, either *Yes* or *No*.
Hard Fault CES: *(display field)*	Displays the number of Consecutive Hard Fault Errored Seconds.
Hard Fault CES: *(display field)*	Displays the number of Consecutive error-free Hard Fault Errored Seconds.
AIS Detected: *(display field)*	Displays the number of Alarm Indication Signals detected.
Yellow Detected: *(display field)*	Displays the number of Yellow Alarms detected.
Link Down Due To Soft Fault: *(display field)*	Indicates whether the link has a soft fault or not, either *Yes* or *No*.
Soft Fault SES: *(display field)*	Displays the number of Soft Fault Severely Errored Seconds. The number of consecutive error-free seconds since the last counter reset. An error-free second is defined as a one-second period in which there were no defects or errors on the link.

Table 7-6: *Link APS Statistics Field Descriptions (Continued)*

Field	Description
Soft Fault CSES: *(display field)*	Displays the number of Consecutive error-free Soft Fault Errored Seconds since the last counter reset. An error-free second is defined as a one-second period in which there were no defects or errors on the link.
CSFes: *(display field)*	Displays the number of Consecutive Soft Fault Errored Seconds (derived from SES).
APS Configuration Error: *(display field)*	Indicates whether or not there is a current Link APS Configuration file error and what the error is derived from. Possible errors are: • *None* - No configuration errors have occurred. • *Protection link not config* - The designated Protection Link Mode is incorrectly configured as Unprotected. • *No protection link provided* - There is no Protection Link assigned to the Working Link. ***Note:*** *Ensure the line type specified for the Protection Link is the same line type used for the Working Link. An error will* ***not*** *be trapped or displayed for this condition.* • *Protection link OOS* - The Protection Link is out of service. • *Embedded framing mismatch* - a mismatched configuration

Selecting an APS View

The APS View for the Diagnostics Manager Menu displays the APS states of the four T1 or E1 APS links on a Quad T1/E1 Module. Use the [**A**]PS View command to toggle between the Link and APS Views of the *Diagnostics Manager Menu*.

To select an APS view, follow the procedure below.

1. From the Diagnostics Manager screen, move your cursor to the link you want to view statistics for and press **E** to access Link Status screen.

   The Link Status screen is displayed.

2. Press **A** to select the APS view.

   The Diagnostics Manager/APS screen is displayed.

3. From this screen you can perform the following by pressing the selected character for the option you want to access.

   - **B**ERT
   - **L**oops
   - E**S**F Statistics
   - 15-Minute Performance **R**egisters
   - **G**.826 Statistics
   - APS Switch**o**ver
   - APS Res**t**ore
   - A**P**S Statistics

4. Refer to the sections below for procedures on accessing these options.

The APS View is a view-only screen, however several Diagnostic test options can be performed. These options are the same as those from the normal Diagnostics Manager menu.

Field Descriptions

Table lists the field descriptions for the Diagnostics Manager (APS) screen.

Diagnostics Manager Menu (APS View) Field Descriptions

Field	Description
#: *(display field)*	Displays the Link Number (1 through 4).
Link Name: *(display field)*	Displays the link name assigned to the link from the Link Configuration Menu.
APS State: *(display field)*	Displays the status of the APS link, either: • *OK* - no errors • *Inactive* - link is out of service • *FPO* (Force Protection Online) - force Protection Link online • *FWO* (Force Working Online) - force Working Link online • *Hard Fault* - when the link switches as a result of a hard fault • *Soft Fault* - when the link switches as a result of a soft fault • *Yellow Alarm* - when the link switches as a result of a problem on the link • *FDL* (Facility Data Link) - FDL is down
APS Function-PL: *(display field)*	Displays the APS function and link number configured for *Protection*.
Conditional State: *(display field)*	Displays the conditional state of the APS link when the link is recovering from a down state, either *Up*, *Down* or *Recovering*.
Operational State: *(display field)*	Indicates the operational state of the APS link, either *Online*, *Standby* or *Offline*.
Revertive State: *(display field)*	Indicates the status of Revertive Mode, either: • *Up* - APS revertive switching occurs when the Working Link recovers • *Down* - the traffic on the Protection Link will not switch back to the Working Link even if the Working Link is operational

Performing an APS Switchover

Note: *Available from the APS View only.*
Revertive Mode must be turned off before performing an APS Switchover.

To perform an APS Switchover, follow the procedure below.

1. From the Diagnostics Manager screen, press **A** to access Diagnostics Manager/APS screen.

   The Diagnostics/APS screen is displayed.

2. Move your cursor to the link you want to switch to/from and press **O**.

   A message is displayed asking if you want to switch over to the protection link.

3. Press **Y**.

   The operational state for the link you are switching to/from will change once this switchover is complete.

Performing an APS Restore

Note: *Available from the APS View only.*

To perform an APS Restore, follow the procedure below.

1. From the Diagnostics Manager screen, press **A** to access Diagnostics Manager/APS screen.

   The Diagnostics/APS screen is displayed.

2. Move your cursor to the link you want to switch to/from and press **T**.

   A message is displayed asking if you want to restore from the protection link.

3. Press **Y**.

   The operational state for the link you are switching to/from will change once this switchover is complete.

Initializing the T1/E1 Framer

The Re-initialize function is used to reset the T1/E1 framer to its default values. It is used to rewrite values for the framer if you suspect that a configuration change didn't take effect or if odd problems are occurring on the status displays.

CAUTION

Re-initializing the framer will cause data to be momentarily interrupted for the selected link.

To initialize the T1/E1 framer, follow the procedure below.

1. From the Diagnostics Manager screen, press **E** to access Link Status screen.

   The Link Status screen is displayed.

2. Press **I** to initialize the T1/E1 framer.

   A message is displayed asking if you want to reset and reconfigure the framer.

3. Press **Y**.

   The T1/E1 framer is initialized.

Viewing ESF Statistics

The ESF Statistics Display allows you to view both current and 24-hour ESF Statistics for the T1/E1 links. The Current Statistics column displays the counts for the current time interval (maximum 15 minutes). The 24 Hour Statistics column displays the counts for the preceding 24-hour period. The information has no meaning in 1-1 Unframed Cross-Connect Mode.

To view ESF statistics, follow the procedure below.

1. From the Diagnostics Manager screen, move your cursor to the link you want to view statistics for and press **E** to access Link Status screen.

   The Link Status screen is displayed.

2. Press **S** to view ESF statistics.

   The ESF Statistics for the selected link are displayed.

The ESF Statistics Display is a read-only screen. Refer to *Field Descriptions* for additional information.

Field Descriptions

Table 7-7 lists the field descriptions for ESF Statistics.

Table 7-7: *ESF Statistics Display Field Descriptions*

Field	Description
Errored Seconds: *(display field)*	Displays the occurrence of a LOF or CRC6 error in a one-second period, known as an errored second. This field displays the number of errored seconds that occurred.
Failed Seconds (UAS): *(display field)*	Displays each one-second period during the occurrence of a Failed Signal State (10 CSES), known as a failed second. This field displays the number of failed seconds that occurred.
Severely Errored Seconds: *(display field)*	Displays the one-second period in which 320 or more CRC6 errors have occurred, known as a severely errored second. This field displays the number of severely errored seconds that occurred.
Bursty Errored Seconds: *(display field)*	Displays the one-second period in which more than one but less that 320 CRC6 errors have occurred, known as a bursty errored second. This field displays the number of bursty errored seconds that occurred.
Loss of Frame Count: *(display field)*	Displays the LOF count. An LOF occurs when either Network equipment or the DTE senses errors in the framing pattern. Depending upon the equipment, this occurs when any 2 of 4, 2 of 5, or 3 of 5 consecutive terminal framing bits received contain bit errors in the framing pattern.
Time in Interval: *(display field)*	Displays a timer that tracks the number of seconds, from *0* to *900* seconds, since the start of the current 15-minute interval.
# **Valid Intervals:** *(display field)*	Displays a counter that tracks the total number of 15-minute intervals in a 24 hour period, up to 96 intervals.
ESF Status: *(display field)*	Displays the status of the T1/E1 line. The status is defined by an 8-digit number that is described below: Example: F00000L0 Digit #1 - “F” or “0” where “F” indicates Failed Signal State (FSS) if “U” or “L” is true. Digit #2 - “U” or “0” where “U” indicates an unavailable signal state. Digit #3 through #6 and #8 are always “0.” Digit #7 - “L” or “0” where “L” indicates the T1 line is in loop.

Viewing 15-Minute Performance Registers

The 15-Minute Performance Registers Display provides the same information as the ESF Statistics Display, but it is broken down by link for each of the 96 15-minute intervals in the preceding 24-hour period. The information has no meaning in 1-1 Unframed Cross-Connect Mode.

To view 15-minute performance registers, follow the procedure below.

1. From the Diagnostics Manager screen, move your cursor to the link you want to view statistics for and press **E** to access Link Status screen.

   The Link Status screen is displayed.

2. Press **R** to view 15-minute performance register statistics.

   The 15-Minute Performance Registers for the selected link are displayed.

3. Press **N** to view the next 48 intervals.

The 15-Minute Performance Registers Display is a read-only screen. Refer to *Field Descriptions* for additional information.

Field Descriptions

Table 7-8 lists the field descriptions for 15-Minute Performance Registers.

Table 7-8: *15-Minute Performance Registers Display Field Descriptions*

Field	Description
INT (Interval): *(display field)*	Displays the interval number for the 96 15-minute intervals preceding the current interval, with *01* being the most recent.
ES (Errored Seconds): *(display field)*	Displays the occurrence of a LOF or CRC6 error in a one-second period, known as an errored second. This field displays the number of errored seconds that occurred.
FS (Failed Seconds): *(display field)*	Displays each one-second period during the occurrence of a Failed Signal State (10 consecutive errored seconds), known as a failed second. This field displays the number of failed seconds that occurred.
SES (Severely Errored Seconds): *(display field)*	Displays a one-second period in which 320 or more CRC6 errors have occurred, known as a severely errored second. This field displays the number of severely errored seconds that occurred.
BES (Bursty Errored Seconds): *(display field)* (displayed for T1 links only)	Displays a one-second period in which more than one but less than 320 CRC6 errors has occurred, known as a bursty errored second. This field displays the number of bursty errored seconds that occurred.

Viewing G.826 Statistics

The G.826 Statistics Display provides G.826 performance statistics for a given T1 or E1 link for the duration of time the link is up and running.

To view G.826 statistics, follow the procedure below.

1. From the Diagnostics Manager screen, move your cursor to the link you want to view statistics for and press **E** to access Link Status screen.

   The Link Status screen is displayed.

2. Press **R** to view G.826 statistics.

   The G.826 Statistics for the selected link are displayed.

The G.826 Statistics Display is a read-only screen. The only action that can performed is clearing the counters (pressing **C**).

Note: *Refer to the ITU-T Standardized Specifications, dated 08/96, for a more detailed description of the G.826 statistics.*

Field Descriptions

Table 7-9 lists the field descriptions for G.826 statistics.

Table 7-9: *G.826 Statistics Field Descriptions*

Field	Description
Link #: *(display field)*	Displays the number of the link for which the status is being presented.
Total Time: *(display field)*	Indicates the amount of time (in seconds) the link is up and running.
Errored Seconds: *(display field)*	Displays a one-second period with one or more errored blocks or at least one defect, known as an errored second. This field displays the number of errored seconds that occurred since the last counter reset.
Error Free Seconds: *(display field)*	Displays a one-second period of time during which the link was error-free. This field represents the number of error-free seconds that occurred.
Severely Errored Seconds: *(display field)*	Displays a subset of errored seconds, a one-second period in which more than 30% of the blocks contain errors is known as a severely errored second. This field displays the number of severely errored seconds that occurred since the last counter reset.
Consecutive Severely Errored Seconds: *(display field)*	Displays a continuous occurrence of severely errored seconds, in one-second intervals, which contain >30% or more errored blocks. This field represents the number of consecutive severely errored seconds that occurred since the last counter reset.
Consecutive Error Free Seconds: *(display field)*	Indicates the number of consecutive one-second period intervals that did not have defects or errors on the link. This field displays the number of consecutive error-free seconds that occurred since the last counter reset.
Background Block Error: *(display field)*	Indicates the number of block errors not occurring as part of a severely errored second. This field displays the number of background block errors that occurred since the last counter reset.

Table 7-9: *G.826 Statistics Field Descriptions*

Field	Description
Unavailable Seconds: *(display field)*	Displays the number of unavailable seconds that occurred on the link during the current interval. At the onset of 10 consecutive SES events, a period of unavailable seconds begins. These 10 seconds are part of the unavailable seconds count. At the end of 10 consecutive non-SES events, a new period of available time begins. These 10 seconds are part of available time. Unavailable seconds are not counted when factoring ratios.
Errored Seconds Ratio: *(display field)*	Indicates the ratio of errored seconds to total seconds in available time during a fixed measurement interval.
Severely Errored Seconds Ratio: *(display field)*	Indicates the ratio of severely errored seconds to total seconds in available time during a fixed measurement interval.
Background Block Error Ratio: *(display field)*	Indicates the ratio of background block errors to total blocks in available time during a fixed measurement interval. The count of total blocks excludes all blocks during severely errored seconds.

Inserting Errors

For diagnostic purposes, specific errors can be inserted and momentarily transmitted either directly to a remote unit or looped back to the DNX-1u.

Note: *Errors cannot be inserted into an unframed link; the error-insertion hot keys will be disabled when a link is in Unframed Mode.*

To insert errors, follow the procedure below.

1. Pressing the specific numeric key indicated on the bottom of the menu will insert a momentary error. The error and its corresponding *hot key* is detailed in Table 7-10.

Table 7-10: *T1/E1 Link Error Insertion Selections*

Option	Description
[1]PRGD (Pseudo-Random Generator Detector)	Inserts a single bit error on the selected link for diagnostic purposes.

2. Once the appropriate *hot key* is pressed, a message is displayed asking if you want to insert a single bit.

Figure 7-18: *Error Insertion Prompt (Typical)*

```
System ID: DNX-1u No. 1                                          Help = [?]
Sycamore Networks, Inc.           DNX-1u
                              Diagnostics Manager
Subsystem ID: T1E1-A          -------------------
                 T1        T1      Loop     Bkpln   BERT     BERT       BERT
# Link Name      Stat                                       Duration   ErrSecs
-+--------------+---- ************************************ -+----------+-----
---
1 Link 01        OK   *                                   *   0          0
2 Link 02        OK   *             -MESSAGE!-            *   0          0
3 Link 03        OK   *                                   *   0          0
4 Link 04        OK   *                                   *   0          0
                      *        Insert Single Bit?         *
                      *                                   *
                      *                                   *
                      *       Are you sure (Y/N)?         *
                      *                                   *
                      ************************************
[B]ert   [L]oop  [E]x
ESF [S]tatistics    15-min Performance [R]egisters    [G].826
A[P]S Statistics    [A]PS View
---------------------  Insert an error  ----------------------
[1]PRGD
```

This screen will display the type of error that is about to be inserted.

3. Press **Y** to insert the error. Once the error is inserted, you are returned to the T1/E1 Link Status Menu, where you can view error status.

Field Descriptions

Table 7-11 lists the field descriptions for the T1/E1 Link Status screen.

Table 7-11: *T1/E1 Link Status Menu Field Descriptions*

Field	Description
Link Name: *(display field)*	Displays the name of the link from the Configuration Menu.
Link Number: *(display field)*	Displays the link number of the exposed link.
DS1/E1 LINK STATUS FIELDS	
Error: *(column)*	Indicates the type of error for the specific T1/E1 link.
State: *(column)*	A display of *On* in this column next to any of the *Error* entries indicates that an error condition currently exists on the T1 or E1 link. A display of *Off* indicates the error condition is not present, but if the errored seconds field has a count, then this alarm has occurred sometime in the past (since the last time the counter was cleared). ***Note:*** *All Error and Alarm states will only be detected in Clear T1/E1 Disabled Mode, except for LOS and BPV. These will also be detected in Clear T1/E1 Framed Mode.*
ErrSecs (Errored Seconds): *(column)*	The display count in this column indicates the quantity of seconds the error condition on the T1 or E1 link is present or was present. Press **C** to clear the counters for this link.
Red Alm (Red Alarm): *(display field)*	A display of *On* indicates that a loss of frame alignment has occurred and synchronization is lost.
Yel Alm (Yellow Alarm): *(display field)*	A Yellow Alarm is generated by the network and sent to the customer premises. It usually indicates the network is not correctly receiving the DNX-1u signal (the network is not in sync or a Red Alarm has occurred).
MF Yel (Yellow Alarm): *(display field)*	A Yellow Alarm is generated by the network and sent to the customer premises. It indicates a remote Multiframe (MF) alarm. ***Note:*** *Valid for E1-CAS and E1-CAS-CRC line types only.*
AIS Ind (Alarm Indication Signal Indication): *(display field)*	A display of *On* indicates that an unframed “all ones” condition is detected. After AIS is detected, the system will return a yellow alarm signal and pass on channel trunk conditioning. ***Note:*** *If the Link Down on AIS function is disabled during provisioning, and an AIS alarm is introduced, the system will send a Yellow RAI Alarm. You can ignore this alarm.*
OOF (Out of Frame): *(display field)*	A display of *On* indicates the received link data stream does not meet pre-set framing criteria.
SEF Ind (Severely Errored Frame Indication): *(display field)*	A display of *On* indicates that a Severely Errored Frame is detected (the receive signal does not meet the requirements of ANSI T1.231).
Tx Slip (Transmit Slip): *(display field)*	A display of *On* indicates that slip is detected in the outgoing path.
Rx Slip (Receive Slip): *(display field)*	A display of *On* indicates that slip is detected in the incoming path.

Table 7-11: *T1/E1 Link Status Menu Field Descriptions (Continued)*

Field	Description
CRC Errors (Cyclic Redundancy Check Errors): *(display field)*	The CRC test is a 6-bit algorithm that checks the content of the entire frame. For T1 (ESF framing), this field indicates the number of CRC6 block errors detected. D4 framing does not include CRC6. The DNX-1u replaces this parameter by counting the number of framing bit errors. The result is a useful picture over time regarding D4 link performance. For E1, this field indicates the number of CRC4 block errors detected. ***Note:*** *The CRC error counts are errored second counts and are not considered absolute value counts.*
Bpv Errors (Bi-Polar Violation Errors): *(display field)*	Displays a counter that records the number of Bipolar Violations detected. This usually indicates that a very weak or excessively strong signal is being received from the network. ***Note:*** *The BPV error counts are errored second counts and are not considered absolute value counts.*
Frm Bit Errors (Framing Bit Errors): *(display field)*	Displays a counter that records the number of frame alignment bit errors detected. This does not mean that synchronization is lost.
Trunk Conditioning: *(display field)*	If trunk conditioning status is *On* and the control bits indicate a Red or Yellow alarm is being received, the following occurs: • Receive data is disabled at all timeslots. • Data is written to corresponding buffer according to content of each timeslot (data/voice). Trunk conditioning pattern depends on profile configuration. If trunk conditioning status is *Off*, then no alarms are being received.
System BERT ErrSecs: *(display field)*	Displays the number of errored seconds resulting from BERT patterns not being returned from the direction of the backplane.
Link BERT ErrSecs: *(display field)*	Displays the number of errored seconds resulting from BERT patterns not being returned from the direction of the link.

E1 National Bits: *(E1 option fields)*	Enables the E1 National S-bits to be set to zero or one. This single byte field can be changed to set the values of the E1 NFA byte in odd frames as depicted below:
	`sa8 sa7 sa6 sa5 sa4 reserved bits`
	`--- --- --- --- --- -------------`
	` 1  1  1  1  1  0  0  0 = F8 (default)`
	Note: *The E1 National Bits option field is available only with E1 line types.*

E1 International Bits: *(E1 option field)*	Enables the InterNational S(i) Spare bit to be set to zero or one. This single byte field can be changed to set the values of the Bit 1 of TS0 G.704 frame as depicted below:
	`reserved bits  S(i)`
	`--------------------------- ----`
	`0  0  0  0  0  0  0  1  = 01 (default)`
	Note: *The E1 International Bits option field is available only with E1 line types.*

Monitor Control Signals (PCM Signalling Display Menu)

Selecting the Monitor Control Signals option will open the PCM Signalling Display menu, which displays the state of the AB, and/or ABCD signalling bits within a PCM (T1 or E1) stream. The state “N/A” applies to unassigned or data-only timeslots in the PCM stream.

The Diagnostics Manager is used monitor control signals for the DNX-1u T1/E1 links.

To view monitor control signals, follow the procedure below.

1. From the T1/E1 Status and Diagnostics Menu screen select **Diagnostics**.

   The Diagnostics Menu is displayed.

2. From this screen you can view line diagnostics by selecting **Monitor Control Signals**.

   The PCM Signaling Display Menu is displayed.

1. From this screen press **Enter** to toggle to the link number you want to view.
2. Press **D**.

   The PCM Signaling Display Menu is displayed.

Figure 7-19: *PCM Signaling Display Menu (T1 Example)*

```
System ID: DNX-1u No. 1                                                Help = [?]
Sycamore Networks, Inc.            DNX-1u
Link:1                   PCM Signaling Display Menu
DSO     To Link    To System     DSO     To Link    To System
-------------------------------------------------------------
01      A_C_       A_C_          13      A_C_       A_C_
02      A_CD       A_CD          14      A_CD       A_CD
03      AB__       AB__          15      AB__       AB__
04      AB_D       AB_D          16      AB_D       AB_D
05      ABC_       ABC_          17      Data       Data
06      ABCD       ABCD          18      Data       Data
07      ___D       ___D          19      N/A        N/A
08      __C_       __C_          20      N/A        N/A
09      _CD_       _CD_          21      N/A        N/A
10      _B__       _B__          22      N/A        N/A
11      _B_D       _B_D          23      N/A        N/A
12      _BC_       _BC_          24      N/A        N/A
```

Figure 7-20: *PCM Signalling Display Menu (E1 Example)*

```
System ID: DNX-1u No. 1                                          Help = [?]
Sycamore Networks, Inc.           DNX-1u
Link:8                    PCM Signalling Display Menu
Chls    To Link    To System     Chls    To Link    To System
-------------------------------------------------------
FRAME
01      A_C_       A_C_          16      A_CD       A_CD
02      A_CD       A_CD          17      AB_D       AB_D
03      AB__       AB__          18      ABCD       ABCD
04      AB_D       AB_D          19      A_CD       A_CD
05      ABCD       ABCD          20      AB_D       AB_D
06      ___D       ___D          21      _B_D       _B_D
07      __C_       __C_          22      ___D       ___D
08      _CD_       _CD_          23      ABCD       ABCD
09      _B_D       _B_D          24      A_C_       A_C_
10      _BC_       _BC_          25      AB_D       AB_D
11      _CD_       _CD_          26      ___D       ___D
12      ___D       ___D          27      N/A        N/A
13      _CD_       _CD_          28      N/A        N/A
14      A_CD       A_CD          29      ABCD       ABCD
15      ___D       ___D          30      _B_D       _B_D
CAS     N/A        N/A
```

The PCM Signalling Display Menu is a read-only screen that displays the control signals for a selected link. It will vary slightly depending upon which type of link is being viewed (T1 or E1). This screen will automatically refresh every five seconds.

Field Descriptions

Table 7-12 lists the field descriptions for PCM signalling.

Table 7-12: *PCM Signalling Display Menu Field Descriptions*

Field	Description
Link: *(display field)*	Displays the link number for which the control signals are shown.
DS0: *(T1 display field)*	Indicates the timeslot (DS0) for the control signals are being reported.
Chls: *(E1 display field)*	Indicates the channel for which the control signals are being reported.
To Link: *(display field)*	Displays the status of signalling towards the link. *N/A* indicates the timeslot is not mapped, or it is a signalling or framing channel, such as E1 CAS. *Data* indicates the timeslot is being used to pass data. Voice traffic is indicated by the display of signalling bits in an *ABCD* format, depending upon application. A letter (*A*, *B*, *C*, or *D*) indicates a logic “high” or one, while an underscore indicates a logic “low” or zero.
To System: *(display field)*	Displays the PCM signalling bit status (per ATT Technical Reference 43801) in the direction of the DNX-1u backplane. *N/A* indicates the timeslot is not mapped. *Data* indicates the timeslot is being used to pass data. Voice traffic is indicated by the display of signalling bits in an *ABCD* format, depending upon application. A letter (*A*, *B*, *C*, or *D*) indicates a logic “high” or one, while an underscore indicates a logic “low” or zero.

Protection Group Stats (HAC Configuration)

Note: *The Protection Group Stats menu option is only displayed if your system is configured with the HAC Feature Option Key.*

The Diagnostics Manager is used monitor control signals for the DNX-1u T1/E1 links.

To view Protection Group Statistics, follow the procedure below.

1. From the T1/E1 Status and Diagnostics Menu screen select **Diagnostics**.

   The Diagnostics Menu is displayed.

2. From this screen you can view line diagnostics by selecting **Protection Group Stats**.

   The Protection Groups Stats screen is displayed.

3. Move your cursor to the selected # field and press **Enter**.

   The Protection Groups Stats screen is displayed.

Figure 7-21: *Protection Group Stats Menu for Single Group*

```
System ID:                                                          Help = [?]
Sycamore Networks, Inc.           DNX-1u
                            Protection Groups Stats
                            -----------------------
Group #.........: 1                    Revertive Mode..: Disable
Type............: HAC                  Switching Mode..: Auto
Service State...: Out Of Service
                                                Consecutive       ErrorSecond
 Func       Slot    Link    State     Status   Hfaults   SESs   15-min   24-hrs
---------- ------- ------- -------    ------  --------  ------- ------   ------
CPE        T1E1-A     1     Standby   Fail         0      0       0        0
PriLink    T1E1-A     2     Standby   Fail         0      0       0        0
SecLink    T1E1-A     3     Standby   Fail         0      0       0        0

---------- Stats -----------
Switch Cnt by CSES        : 0
Switch Cnt by Hard Faults : 0
Switch Cnt by Users       : 0
Switch Cnt by Revertive   : 0



Manual [S]witch     [E]xpose     [C]lear counters
```

4. From this screen you can view the status of the Protection Group. You also can view a submenu or invoke additional diagnostic actions using the *hot keys* indicated on the bottom of the display.

Field Descriptions

Table 7-13 lists the field descriptions for protection group statistics.

Table 7-13: *Protection Group Stats Field Descriptions*

Field	Description
#: *(display field)*	Displays a index number of the current Protection Group, from *1* to *4*.
Type: *(display field)*	Displays the type of Circuit Protection Group, either: • *Not CFG* - Not Configured; empty group record. • *SAC* - Standard Availability Circuits. Link-based protection with system-configured clear channel connections. Requires links designated as Customer Premise Equipment (CPE) and Primary. • *HAC* - High Availability Circuits. Link-based protection with system-configured clear channel connections. Requires links designated as CPE, Primary, and Secondary. • *APS* - Automatic Protection Switching. Connection-based circuit protection for user-configured connections.
Name: *(display field)*	Displays the user-selected name for this Protection Group.
CPE: *(display field)*	Displays the unit/slot/port configured location of the Group's CPE port.
Primary: *(display field)*	Displays the unit/slot/port configured for the Group's Primary port.
Secondary: *(display field)*	Displays the unit/slot/port configured for the Group's Secondary port. ***Note:*** *This field is not required when the Type is set to Standard Availability Circuits (SAC).*
Service State: *(display field)*	Indicates the Protection Group's configured state, either *In Service* or *Out Of Service*.

Table 7-14: *Protection Group Stats Menu for Single Group Field Descriptions*

Field	Description
Group #: *(display field)*	Displays the Protection Group number, from *1* to *4*.
Type: *(display field)*	Displays the type of Circuit Protection Group, either: • *Not CFG* - Not Configured; empty group record. This is the default. • *SAC* - Standard Availability Circuits. Link-based protection with system-configured clear channel connections. Requires links designated as Customer Premise Equipment (CPE) and Primary. • *HAC* - High Availability Circuits. Link-based protection with system-configured clear channel connections. Requires links designated as CPE, Primary, and Secondary. • *APS* - Automatic Protection Switching. Connection-based circuit protection for user-configured connections.
Service State: *(display field)*	Displays the Protection Group's configured state, either *In Service* or *Out Of Service*.
Revertive Mode: *(display field)*	Indicates the group's Switching Mode. When set to *Enable*, the Group will automatically switch back to the primary when the primary's fault condition clears. When set to *Disable*, the Group will not automatically switch back to the primary and a switch back can only occur at the user's request.

Table 7-14: *Protection Group Stats Menu for Single Group Field Descriptions*

Field	Description
Switching Mode: *(display field)*	Indicates the group's Switching Mode. When set to *Auto*, the Group will be switched to the secondary whenever the primary declares a fault condition. When set to *Manual*, automatic switching is disabled and a switch can only occur at the user's request.
Func: *(display field)*	Displays the type of Protection Group link, either: • *CPE* - Customer Premise Equipment (CPE) Link. • *PriLink* - Primary Link. • *SecLink* - Secondary Link.
Slot: *(display field)*	Displays the T1/E1 module slot, either *T1E1-A* or *T1E1-B*.
Link: *(display field)*	Displays the current Protection Group Link number, from *1* to *4*.
State: *(display field)*	The current Protection Group Link state: *Standby* or *Online*.
Status: *(display field)*	Displays the current Protection Group's Link status, either: • *OK* - No errors in line state. • *Fail* - Line state in error for less than 10 seconds. • *Unavailable* - Line state status is either: - Line state in error for more than 10 seconds or - Line state error-free for less than 10 seconds. • *Defective* - Last link error count does not equal current link error count. Link error includes: LOF, LOS, Remote MF Alarm, AIS, Link Down, SLIPs, FDL Error, CHFES, CSFES, SEF and Configuration Error. Line state includes: Out of Service, LOF, LOS, AIS, Remote MF Alarm, SLIPS, and SEF.
Consecutive Hfaults: *(display field)*	Indicates the total number of Consecutive Hard faults, in one-second intervals, since the link is up and configured as part of the Protection Group.
Consecutive SESs: *(display field)*	Indicates the total number of consecutive occurrences of Severely Errored Seconds (SES), in one-second intervals, since the link is up and configured as part of the Protection Group.
ErrorSecond 15-min: *(display field)*	Indicates the total number of Errored Seconds in the current 15-minute interval.
ErrorSecond 24-hrs: *(display field)*	Indicates the total number of Errored Seconds in the current 24-hour period.
Protection Group STATUS FIELDS	
Switch Cnt by CSES: *(display field)*	Displays the number of switch overs caused by Consecutive Severely Errored Seconds (CSES).
Switch Cnt by Hard Faults: *(display field)*	Displays the number of switch overs caused by hard faults.
Switch Cnt by Users: *(display field)*	Displays the number of switch overs caused by users (manual switch).
Switch Cnt by Revertive: *(display field)*	Displays the number of switch overs caused by revertive switching.

Viewing the Status for a Specific Link

To view the status of an HAC configuration for a specific link, follow the procedure below.

1. From the Protection Groups Stats screen, move your cursor over the selected link name and press **E**.

   The Link Status screen is displayed, which is used to display the status of the T1/E1 links, access G.826 statistics, access ESF statistics, access 15-min Performance Registers, reinitialize the framer and insert errors for diagnostic purposes.

2. From this screen you can perform the following by pressing the selected character for the option you want to access.
   - Perform a **M**anual Switch
   - **C**lear Error Counters
   - **E**xpose (to access the Link Status screen)

Figure 7-22 illustrates the process that occurs prior to the generation of an alarm or alert that results in a HAC or SAC Switchover.

Figure 7-22: *HAC or SAC Alarm/Alert Processing Flowchart*

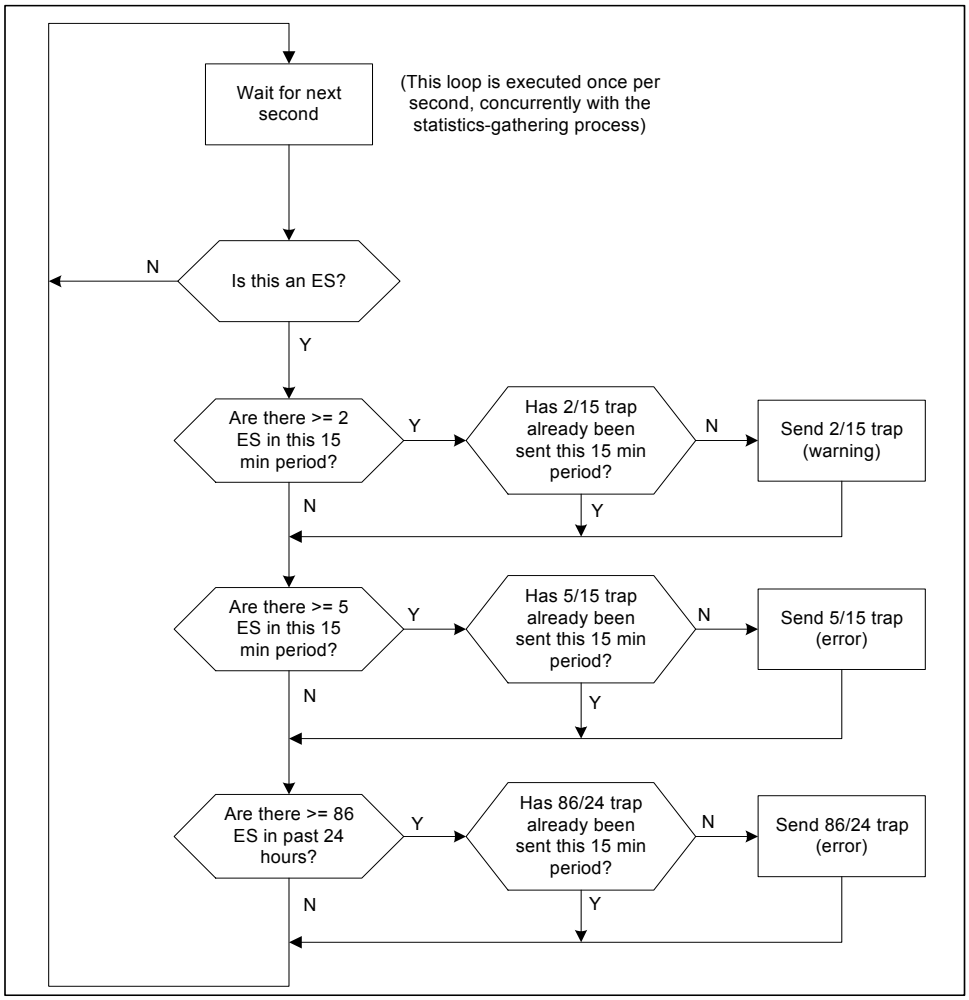

Router

The Router LAN and Virtual WAN Status Menu provides access to submenus to view Physical Port Statistics and Logical Port Statistics. The Router LAN and Virtual WAN Status Menu can be accessed as shown below.

Navigation:
DNX-1u Main Menu ↓ Status and Diagnostics ↓ Select ROUTER

Viewing Router Alarm Detail Information

To view router alarm detail information, follow the procedure below.

1. From the System Summary screen move your cursor to **ROUTER** and press **A**.

   The Subsystem Alarm Information screen is displayed.

Figure 7-23: *Subsystem Alarm Information Screen*

```
System ID: DNX-1u No. 1                                          Help = [?]
Sycamore Networks, Inc.           DNX-1u
                         Subsystem Alarm Information

    Subsystem: ROUTER   Configured Type: Router

Subsystem........: Online
In Test..........: No
Error Indicator..: No









                             Port Alarm Information
                             ----------------------
01=None
```

2. Press **Esc** to exit out of this screen return to the System Summary screen.

Viewing Router Subsystem Information

To view Router Subsystem information, follow the procedure below.

1. From the System Summary screen select **ROUTER**.

   The LAN and Virtual WAN Status screen is displayed.

Figure 7-24: *Router LAN and Virtual WAN Status Screen*

```
System ID: DNX-1u No. 1                                          Help = [?]
Sycamore Networks, Inc.          DNX-1u


                          LAN and Virtual WAN Status


                                  Physical
                                  Logical
```

2. From this screen you can choose to view either Physical Port Statistics or Logical Port Status.
3. Refer to the sections below to view Physical port or Logical port status information.

Viewing Physical Port Status

The Router Physical Port Statistics Display allows you to view statistics for the Router's Physical Ports, as well as the WAN virtual ports.

To view Physical port status information, follow the procedure below.

1. From the LAN and Virtual WAN Status screen select **Physical**.

   The Physical Port Statistics screen is displayed.

Figure 7-25: *Physical Port Statistics Screen*

```
System ID: DNX-1u No. 1                                          Help = [?]
Sycamore Networks, Inc.           DNX-1u
                              Logical Port Status
LAN port status:                        Physical address: [00:20:54:30:0b:e8]
Transmitted frames.: 852                Received frames.: 151945
Transmit discards..: 0                  Receive discards: 0
Transmit errors....: 0                  Receive errors..: 0
Transmit collisions: 0                  Filtered frames.: 0

                                WAN Port Status
Virtual Port.......: WAN 1

Port state.........: Out of service
WAN protocol.......: PPP               Management mode....: None
Transmitted frames.: 0                 Network/User mode..: User
Transmit errors....: 0                 Received FECN......: 0
Received frames....: 0                 Received BECN......: 0
Receive errors.....: 0


                                        Reset counters =    ['R']
```

2. From this screen the only operator interaction available is either selecting between the WAN 1 through WAN 14 Virtual Ports by pressing **Enter** or **B**, or resetting the counters by pressing **R**. Refer to *Field Descriptions* below for more information.

Field Descriptions

Table 7-15 lists the field descriptions for the physical port statistics.

Table 7-15: *Physical Port Statistics Field Descriptions*

Field	Description
LAN PORT STATUS	
Transmitted Frames: *(display field)*	Displays the number of frames this interface forwarded to the LAN.
Transmit Discards: *(display field)*	Displays the number of frames that could not be transmitted due to errors or memory limitations.
Transmit Errors: *(display field)*	Displays the number of times the maximum transmit collisions were reached.

Table 7-15: *Physical Port Statistics Field Descriptions*

Field	Description
Transmit Collisions: *(display field)*	Displays the number of transmit collisions.
Physical address: *(display field)*	Displays the Ethernet (MAC) address of the LAN interface.
Received Frames: *(display field)*	Indicates the number of frames this interface received from the LAN. The bridge examines the destination addresses of these frames and the frame is either forwarded or filtered.
Receive Discards: *(display field)*	Indicates the number of received frames discarded because of errors or memory limitations.
Receive Errors: *(display field)*	Indicates the number of frames received with CRC or alignment errors.
Filtered Frames: *(display field)*	Indicates the number of received frames that were filtered.
WAN PORT STATUS	
Virtual Port: *(option field)*	Selects the virtual port you want to view statistics for. The choices are *WAN* 1 to *WAN 14*.
Port State: *(display field)*	Specifies the state of the WAN interface. *In Service* indicates valid frames are being received.
WAN Protocol: *(display field)*	Displays the protocol used on the WAN interface, either Point-to-Point (*PPP*) or *Frame Relay*. Refer to the WAN Configuration Menu for a description of each of the protocols or to change the protocol.
Transmitted Frames: *(display field)*	Displays the number of frames this interface transmitted to the WAN.
Transmit Errors: *(display field)*	Displays the number of frames this interface transmitted with errors.
Received Frames: *(display field)*	Displays the number of frames this interface received from the WAN.
Receive Errors: *(display field)*	Displays the number of frames received with CRC or alignment errors.
Management Mode: *(display field)*	Indicates the Frame Relay Management Mode, either: ANSI T1.617D, CCITT, Q.933A or LMI. Refer to the WAN Configuration Menu to change the mode.
Network/User Mode: *(display field)*	Indicates the state of the unit, either: • *Network* Mode - Point-to-Point and/or test applications. • *User* Mode - connected to a carrier with a switch.
Received FECN: *(display field)*	Indicates the number of frames received with a forward explicit congestion notification.
Received BECN: *(display field)*	The number of frames received with a backward explicit congestion notification.

Viewing Logical Port Status

The Logical Port Status Menu provides a listing of every “configured” Logical port. Each screen summarizes 32 Logical ports. If more than 32 Logical ports are configured, this screen automatically displays the status of the remaining ports when it refreshes itself (every 10 seconds). Once all of the configured ports are displayed, the unit will start to re-display the ports, starting at 0. You can not page down on this menu; the unit automatically pages through the configured ports.

To view logical port status information, follow the procedure below.

1. From the LAN and Virtual WAN Status screen select **Logical**.

   The Logical Port Status screen is displayed.

Figure 7-26: *Logical Port Status Screen*

```
System ID: DNX-1u No. 1                                          Help = [?]
Sycamore Networks, Inc.           DNX-1u
                              Logical Port Status
Protocol       Port   DLCI Status       Protocol       Port   DLCI Status
-------------- ------ ---- --------     -------------- ------ ---- --------
Ethernet       LAN    ---- Active
SLIP           ASYNC2 ---- Active
PPP            WAN 1  ---- Inactive

                                                  Page up/down =      ['+'/'-']
```

Field Descriptions

Table 7-16 lists the field descriptions for Logical Port Status.

Table 7-16: *Logical Port Status Menu Field Descriptions*

Field	Description
No.: *(display field)*	Identifies each logical port, as configured on the Logical Port Configuration Menu.
Protocol: *(display field)*	Identifies the protocol configured for the logical port. For LAN interfaces, either *Ethernet*, *Ethernet II*, or *SNAP.* For WAN interfaces, either *Point-to-Point, Multilink, SLIP*, *PPP/LAPB*, *Multilink/LAPB* or *Frame Relay*.
Port: *(display field)*	Identifies the Physical port where the frames are transmitted, either *LAN*, *WAN* 1 or *WAN* 2.
DLCI: *(display field)*	Identifies the DLCI to be used. This is only relevant for WAN ports running Frame Relay. For the LAN interface, this field will always be *empty*.
Status: *(display field)*	Displays whether the port is *Active* (traffic is being routed over it) or *Inactive* (no traffic).

High Speed Synchronous Data

The High Speed Synchronous Data Status and Diagnostics Menu provides access to several embedded diagnostic facilities, including loopbacks and built-in BERT. It also provides access to screens that display HSSD port configuration and HSSD port status.

Navigation:
DNX-1u Main Menu ↓ Status and Diagnostics ↓ Select SYNC

Viewing HSSD Alarm Detail Information

To view HSSD alarm detail information, follow the procedure below.

1. From the System Summary screen move your cursor to **SYNC** and press **A**.

   The Subsystem Alarm Information screen is displayed.

Figure 7-27: *Subsystem Alarm Information Screen*

```
System ID: DNX-1u No. 1                                          Help = [?]
Sycamore Networks, Inc.           DNX-1u
                        Subsystem Alarm Information

    Subsystem: SYNC               Configured Type: High Speed Sync

Subsystem........: Online
Clock Source.....: No
In Test..........: No
Error Indicator..: No









                            Port Alarm Information
                            ----------------------
01=None     02=None
```

2. Press **Esc** to exit out of this screen return to the System Summary screen.

Viewing HSSD Subsystem Information

To view HSSD status information, follow the procedure below.

1. From the System Summary screen select **SYNC**.

   The Synchronous screen is displayed.

Figure 7-28: *High Speed Synchronous Screen*

```
System ID: DNX-1u No. 1                                          Help = [?]
Sycamore Networks, Inc.          DNX-1u


                                 Synchronous

                               View Configuration
                               Diagnostics
```

2. From this screen you can view the configuration of the HSSD Links, conduct HSSD diagnostic tests, and view HSSD link status and statistics.

Viewing Configuration Information

You can view the configuration of the HSSD ports as a group or obtain detailed configuration of an individual port.

To view configuration information, follow the procedure below.

1. From the Synchronous screen select **View Configuration**.

   The SYNC Configuration screen is displayed.

2. Select a Port and press **Enter**.

   The specific port configuration information is displayed.

Figure 7-29: *SYNC Port Configuration Screen*

```
System ID: DNX-1u No. 1                                          Help = [?]
Sycamore Networks, Inc.          DNX-1u

                            SYNC Port Configuration


                    Port Number..............: 1
                    Name.....................: Port Name
                    Status...................: In Service
                    Mode.....................: NxDS0
                    Type.....................: EIA-232
                    Data.....................: Normal
                    Clock....................: Normal
                    V.54 Network Loop........: Disabled
                    Disable TX FIFO Errors...: Yes
                    Disable Clock Edge Errors: Yes
                    Timing...................: Int
                    DSR......................: Force On
                    DCD......................: Force On
                    CTS......................: Force Off
```

Field Descriptions

Table 7-18 lists the field descriptions for the SYNC Port Configuration screen.

Table 7-17: *SYNC Port Configuration Screen Field Descriptions*

Field	Description
Port Number: *(display field)*	Displays the HSSD Port Number, either *1* or *2*.
Name: *(display field)*	Displays the name for the HSSD port, entered from the Port Configuration Menu.
Status: *(display field)*	Displays the status of the port, either *In Service* (port is active) or *Out Of Service*.
Mode: *(display field)*	Displays the speed of the port as either *NxDS0*, *8 kbps XOT*, or *16 kbps XOT*.

Table 7-17: *SYNC Port Configuration Screen Field Descriptions*

Field	Description
Type: *(display field)*	Displays the type of interface the High Speed port supports: • *EIA-232* - Common physical layer interface standard that supports unbalanced circuits at signal speeds of up to 64 kbps. Formerly known as RS-232.
Type cont...: *(display field)*	• *EIA-530* - Refers to two electrical implementations of EIA/TIA-449: RS-422 (for balanced transmission) and RS-423 (for unbalanced transmission). Referred to collectively as EIA-530. • *EIA-530A* - Common physical layer interface standard that supports unbalanced circuits at signal speeds of up to 64 kbps. Formerly known as RS-232. • *EIA-422* - Common physical layer interface standard that supports balanced electrical implementation of EIA/TIA-449 for high-speed data transmission. Formerly known as RS-422. • *ITU-V.35* - ITU-T standard describing a synchronous, physical layer protocol used for communications between a network access device and a packet network. V.35 is most commonly used in the United States and in Europe, and is recommended for speeds up to 48 kbps. • *ITU-X.21* - ITU-T standard for serial communications over synchronous digital lines. The X.21 protocol is used primarily in Europe and Japan.
Data: *(display field)*	Specifies the data polarity of the port, and applies to both the transmit or receive data paths, either *Normal* or *Invert*.
Clock: *(display field)*	Displays the polarity of the receive clock, either *Normal* or *Invert*.
V.54 Network Loop: *(display field)*	Indicates if the module will respond to V.54 loop diagnostic codes received from the network supplier, either *Enabled* or *Disabled*.
Disable TX FIFO Errors: *(display field)*	Displays the status of counting TX FIFO errors, either *Yes* or *No*. ***Note:*** *The default setting is Yes.*
Disable Clock Edge Errors: *(display field)*	Displays the status of counting of Clock Edge errors, either *Yes* or *No*. ***Note:*** *The default setting is Yes.*
Timing: *(display field)*	Displays the source of the port's bit rate clock. The choices are: • *Int* - Internal Timing Mode. The HSSD port provides the DTE with both the transmit and receive timing information necessary to clock the data in and out at both ends. The only timing reference for this application is derived from the DNX-1u unit-level timing that is ultimately managed by the internal processor. • *Int/Ext* - Internal/External Timing Mode. The HSSD port provides the DTE with receive timing information (DNX-1u unit-level timing) necessary to clock the receive data at both ends; whereas the DTE provides the HSSD port with terminal timing information necessary to clock the transmit data at both ends. • *Ext* - External Timing Mode. The CPE (DCE in this case) provides the HSSD port with the terminal timing information necessary using a cross-over cable which is necessary to clock both the transmit and receive data at both ends. The timing reference for this application is derived from the CPE source, however, the cross-connect fabric is still managed by the DNX-1u timing reference.

Table 7-17: *SYNC Port Configuration Screen Field Descriptions*

Field	Description
DSR: *(display field)*	Displays the Data Set Ready (DSR) method used on this port. The choices are: • *Force Off* - DSR signalling is off. • *Force On* - DSR signalling is on. • *Track DTR* - Tracks Data Terminal Ready (DTR) signal before transmitting data to the DTE.
DCD: *(display field)*	Displays the Data Carrier Detect (DCD) method used on this port. The choices are: • *Force Off* - DCD is off. • *Force On* - DCD is on. • *Track RTS* - Asserts Request to Send (RTS) each time data needs to be transmitted and drops RTS at some point after data transmission begins. • *Drop Carrier on Link Failure* - Drops DCD in response to a Carrier link fault.
CTS: *(display field)*	Displays the Clear to Send (CTS) control signal configuration used on this port. The choices are: • *Force Off* - CTS method is off. • *Force On* - CTS method is on. • *Track RTS* - Asserts Request to Send (RTS) each time data needs to be transmitted and drops RTS at some point after data transmission begins.

Viewing Diagnostic Information

The HSSD Status and Diagnostics Menu provides access to several embedded diagnostic facilities, including loopbacks and built-in BERT.

To view diagnostic information, follow the procedure below.

1. From the Synchronous screen select **Diagnostics**.

   The SYNC Diagnostics screen is displayed.

Figure 7-30: *SYNC Diagnostics Screen*

```
System ID: DNX-1u No. 1                                          Help = [?]
Sycamore Networks, Inc.           DNX-1u

                                SYNC Diagnostics
                                ----------------
                      Local Remote           Test       Local   Remote
# Port Name  State    Loop  Loop   Bert      Duration   Errors  Errors
- ---------- -------- ----- ------ --------  --------   ------- -------
1 Port Name  NoConn   Off   Off    Off       0          0       0
2 Port Name  NoConn   Off   Off    Off       0          0       0









[B]ert    [L]oop    [E]xpose    [C]lear Error Counters    [I]nject Error Burst
```

2. Select a Port and press **Enter**.

   The specific port configuration information is displayed.

3. From this screen a submenu can be viewed or invoked to perform additional diagnostics, such as loopbacks or BERT.

Field Descriptions

Table 7-18 lists the field descriptions for SYNC diagnostics.

Table 7-18: *SYNC Diagnostics Screen Field Descriptions*

Field	Description
#: *(display field)*	Displays the HSSD Port Number, either *1* or *2*.
Port Name: *(display field)*	Displays the name for the HSSD port, entered from the Port Configuration Menu.
State: *(display field)*	Indicates the port's current status, either: OK (*in-service*), Inactive (*out-of-service)*, or *NoConn* if no connection is mapped to the port.
Local Loop: *(display field)*	Indicates the status or the loopack, either *On* if loopback is enabled or *Off* if no local loop is enabled.
Remote Loop: *(display field)*	Indicates the status or the remote loopack, either *V.54* if loopback is enabled or *Off* if no local loop is enabled.
Bert: *(display field)*	Indicates the type of BERT currently enabled, either *all zeros, all ones*, or *2047*. If BERT is not enabled, then *Off* is indicated. See "HSSD BERT" on page 7-52 for details.
Test Duration: *(display field)*	Displays the amount of time (in seconds) the current BERT pattern is enabled.
Local Errors: *(display field)*	Displays the number of local errored seconds that occurred in a one-second period while the HSSD port was in test. Errors are detected on a BERT pattern from an external device connected to the HSSD port.
Remote Errors: *(display field)*	Displays the number of remote errored seconds that occurred in a one-second period while the HSSD port was in test. Errors are detected on a BERT pattern from devices that interface with the HSSD Port using the DNX-1u backplane.
OPTION KEYS	
[B]ERT: *(option selection)*	Selecting **B** opens the BERT Selection Menu, which allows you to set up Bit Error Rate Testing for the selected link. See "HSSD BERT" on page 7-52 for details.
[L]oop: *(option selection)*	Selecting **L** opens the Loopback Selection Menu, which allows you to set up diagnostic loopbacks for the selected link. See "HSSD Loopbacks" on page 7-54 for details.
[E]xpose: *(option selection)*	Selecting **E** opens the Port Status (Expose) Display, which is used to display the status of the HSSD Port. See "HSSD Port Status (Expose) Display" on page 7-59 for details.
[C]lear Error Counters: *(option selection)*	Selecting **C** will clear the error counters for both HSSD ports.
[I]nject Error Burst: *(option selection)*	Selecting **I** allows you to inject an error burst on the selected port for diagnostic purposes. See "Inserting Errors" on page 7-62 for details.

HSSD BERT

The built-in BERT generator and testers can be used along with loopbacks to test and determine the status of the HSSD ports. Statistics displays are also provided for monitoring and diagnostic purposes. In addition to providing individual port-level loopbacks, independent bit error rate test generators/detectors are provided to support circuit-level diagnostics. By default, each HSSD BERT provides simultaneous bi-directional analysis. For example, simultaneously tests towards the system backplane and towards the cross-connected remote link - similar to a system-initiated T1 BERT. HSSD BERTs can be selected using the management interface or via SNMP for the following test patterns:

- All-Ones (0xFF)
- All-Zeroes (0x00)
- 2047 or 2^{11}-1 Pseudo-Random Bit Stream (PRBS)

Test duration and resultant errored seconds are presented to the operator upon request. The ability to inject individual errored seconds is available to verify the existence of a loopback or end-to-end BERT test links.

Figure 7-31: *Bit Error Rate Test*

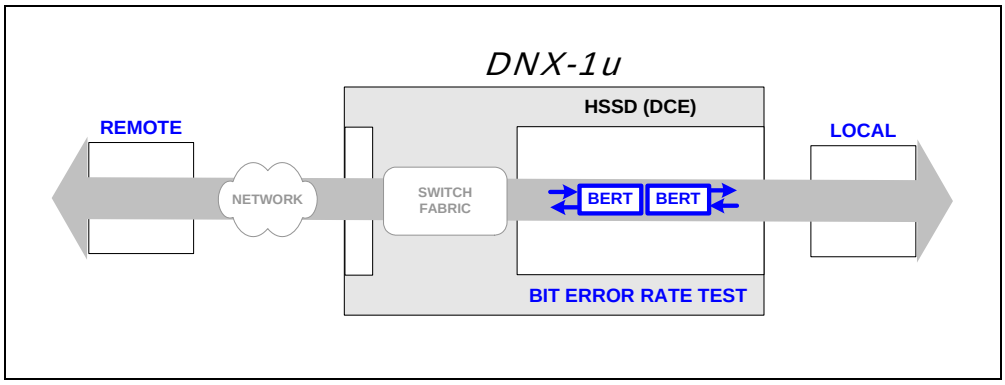

Initiating HSSD BERT

To set up Bit Error Rate Testing (BERT) for a selected link, follow the procedure below.

1. From the SYNC Diagnostics screen, press **B** to set up BERT.

   The Bit Error Test (BERT) Selection screen is displayed.

Figure 7-32: *HSSD BERT Selection Menu*

```
System ID: DNX-1u No. 1                                          Help = [?]
Sycamore Networks, Inc.            DNX-1u
                                  BERT Select
                                  -----------
                                Port Number..: 1
                                Port Name....: Port Name
                                Current BERT.: Off
                                New BERT.....: Off

Available Bit Error Tests (BERTs)
---------------------------------
[O]ff
All-[0]s (0x00)
All-[1]s (0xFF)
[2]047 Pattern
```

2. Select a BERT pattern by placing your cursor on the *New BERT* field and press **Enter** to cycle through the choices or press the specific hot key indicated on the bottom of the menu.
3. Press **X** to start the test.

   A message is displayed asking if you want to start a new test.
4. Press **Y** to initiate the test and return to the Diagnostics Manager menu or press **N** to cancel and return to the BERT Selection submenu.

Stopping HSSD BERT

To stop Bit Error Rate Testing (BERT) for a selected link, follow the procedure below.

1. From the SYNC Diagnostics screen, press **B**.

   The Bit Error Test (BERT) Selection screen is displayed.
2. Move your cursor to the *New BERT* field, press **O**.
3. Press **X** to stop the test.

   A message is displayed asking if you want to stop the test.
4. Press **Y** to stop the test and return to the SYNC Diagnostics Manager Menu or press **N** to cancel and return to the BERT Selection submenu.

HSSD Loopbacks

There are multiple loopback options. Each of the HSSD ports can be independently looped back, and these loopbacks can occur towards the line or towards the backplane. Externally-initiated local loopbacks are also supported.

Setting up a Loopback

To set up a loopback a selected link, follow the procedure below.

1. From the SYNC Diagnostics screen, press **L** to set up a loopback.

   A Loop Select screen is displayed.

Figure 7-33: *Loop Select Screen*

```
System ID: DNX-1u No. 1                                          Help = [?]
Sycamore Networks, Inc.            DNX-1u
                              Loop Select Screen
                              ------------------
                               Port Number...: 1
                               Port Name.....: Port Name
                               Local.........: Off
                               Remote V.54...: Off





Available Loopbacks
-------------------
[L]ocal On          Local [O]ff
[R]emote V.54 On    Remote V.54  O[f]f
```

2. From this screen select a specific loop by placing the cursor on the Local, Remote V.54, or Backplane Loop field and press **Enter** to toggle it to On, or press the appropriate hot key as shown on the bottom of the screen.
3. After you select a loop, press **X** to enable it.

   A message is displayed asking if you want to process the loop command.
4. Press **Y** to initiate the loop.

   You are returned to the SYNC Diagnostics screen.

Field Descriptions

Table 7-19 lists the field descriptions for HSSD loopbacks.

Table 7-19: *Loop Select Screen - Field Descriptions*

Loop	Description
Local Loopback	The most fundamental diagnostic. It is performed bi-directionally as close to the DTE interface as practical. • Data channel from local DTE is looped back toward port (local DTE); and • Data channel from remote site is looped back toward fabric (remote site). Once this loopback is initiated using the management interface or SNMP command it stays in place until it is commanded to terminate (or the port is reconfigured). ***Note:*** *Port timing must be configured as "Int" in order for Local Loop to function properly, otherwise the port will fail local loop test.* **Figure 7-34:** *Local Loopback* 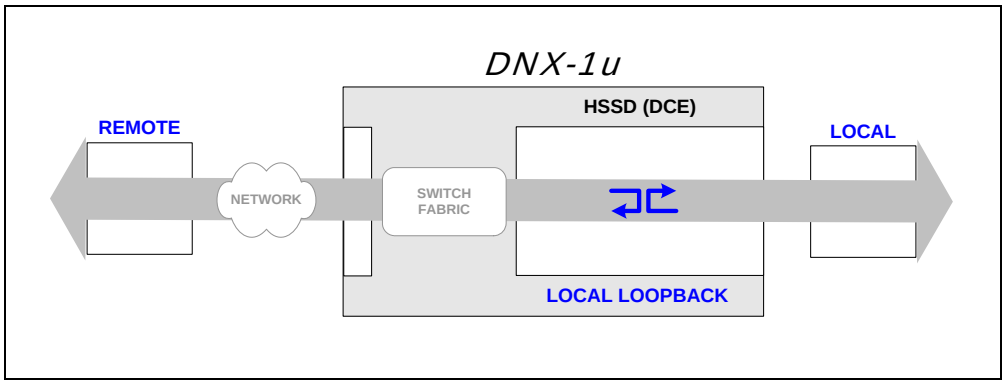

Table 7-19: *Loop Select Screen - Field Descriptions (Continued)*

Loop	Description
Remote V.54 Loopback	Uses an HSSD V.54 pattern generator to loop traffic at the far-end site; for example, not towards the local DTE, using in-band ITU-V.54 compliant commands. • Data channel at remote site is looped back toward HSSD port (local DTE) using V.54. It is initiated using the management interface it stays in place until it is commanded to terminate (or the port is reconfigured); thereby, restoring user traffic flow. The overall remote (V.54-enabled) loopback process is performed at the local end as follows: • Loop Up command issued until returned V.54 pattern is: - Detected for greater than 1 second (remote loopback established) and code stopped; or - Not detected within 10 seconds (remote loopback failed) and remote loop test aborted; • Once remote loopback is in place, BER testing can commence using user command; • Loop Down command issued until returned V.54 pattern is: - Not detected (remote loopback removed) and remote loopback test is completed; or - Detected for greater than 10 seconds (remote loopback still in place) and test aborted. **Figure 7-35:** *Remote V.54 Loopback* 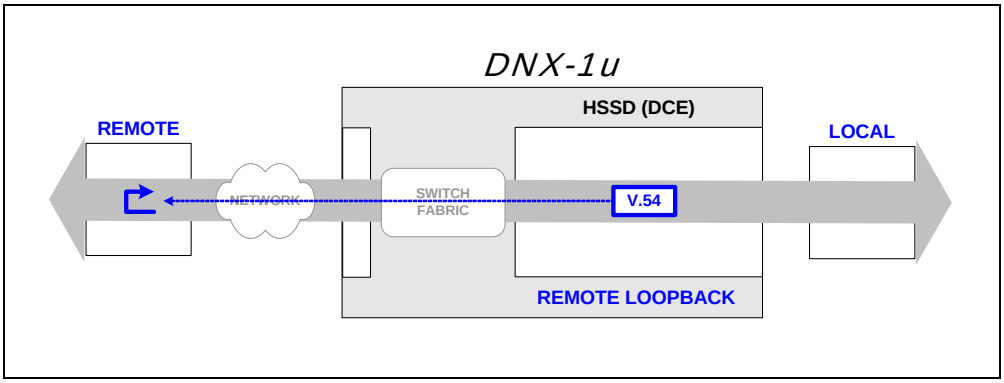

Table 7-19: *Loop Select Screen - Field Descriptions (Continued)*

Loop	Description
V.54 Remotely Initiated Local Loopback	Once the appropriate loop-up procedures are completed, you can perform testing and issue the remote necessary loop down pattern and perform a test from the remote site. Due to the bi-directional nature of the resultant loopback, BER testing can be performed from the local DTE as well; however, only the remote site can issue the loop-down codes. The V.54 Loopback is essentially a DNX-1u local loopback that can be controlled remotely using in-band ITU-V.54 compliant commands; thereby, providing a V.54 loopback capability. • Data channel from local DTE is looped back toward port (local DTE); and • Data channel from remote site is looped back toward fabric (remote site). A backplane-facing V.54 detector is implemented that can discriminate between nominal data traffic and the unique patterns specified in this standard and properly act on these commands. The ability of a port to respond to a V.54 loopback request can be enabled or disabled using the management interface or SNMP commands. If disabled, the in-band V.54 loopback command will be passed to the attached DTE device. Once the loop-up procedures are completed, the remote user can perform further testing and issue the necessary loop-down pattern, or directly control the local port diagnostics using the management interface, upon completion of this analysis. **Figure 7-36:** *External testing using a V.54 Loopback* 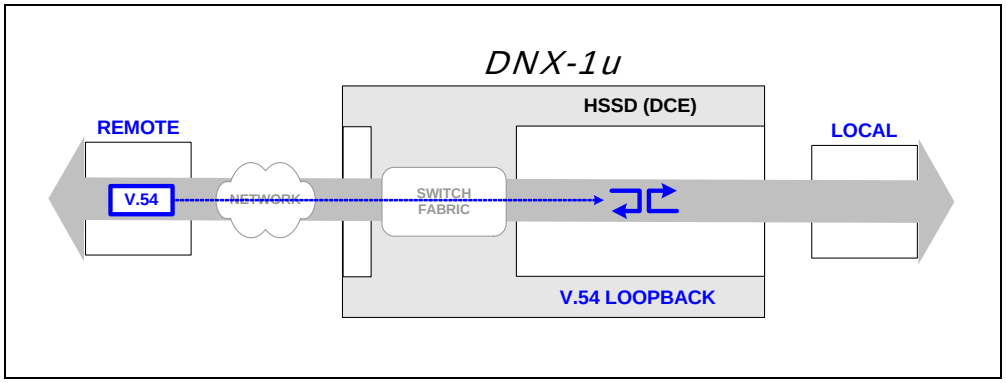

Table 7-19: *Loop Select Screen - Field Descriptions (Continued)*

Loop	Description
Backplane Loop	A Backplane Loopback is a useful diagnostic to fully test the HSSD port integrity. It will redirect the assigned timeslots back towards the local DTE after fully traversing the HSSD Subsystem. ***Note:*** *This loopback only affects an existing backplane connection. The loopback will not occur without a defined connection.* **Figure 7-37:** *External testing using a Backplane Loopback* 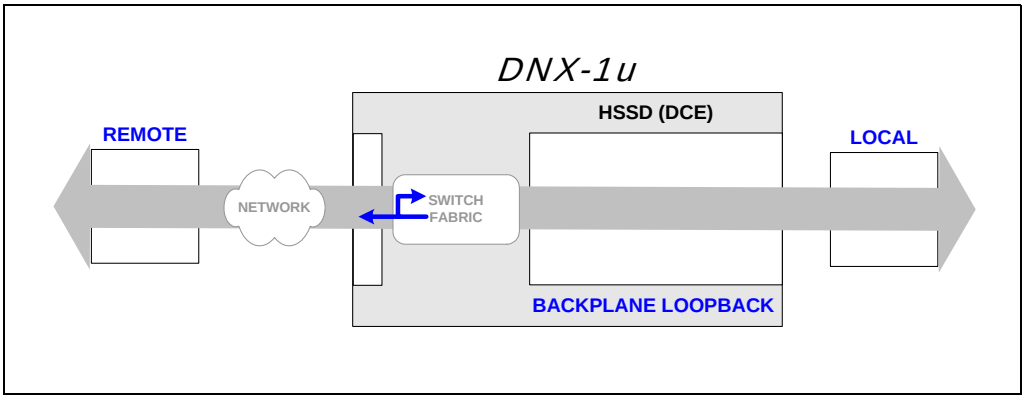
Off	No loopbacks are enabled.

HSSD Port Status (Expose) Display

The *Expose* function is used to display the status of the HSSD port, clear counters, and insert errors for diagnostic purposes.

To access the Port Status screen, follow the procedure below.

1. From the SYNC Diagnostics screen, press **E** to access the Port Status screen.

   The Port Status screen is displayed for EIA-232, EIA-530, EIA-530A, EIA-422, or ITU-V.35.

Figure 7-38: *HSSD Port Status Menu (EIA-232, EIA-530, EIA-530A, EIA-422, or ITU-V.35)*

```
System ID: DNX-1u No. 1                                          Help = [?]
Sycamore Networks, Inc.            DNX-1u
                                  Port Status
                                  -----------

Port#: 1       Name: Port Name       Type: ITU-V.35

                                                     State  Errored Seconds
DSR..: Force On                      RX FIFO........: Error       0
DCD..: Force On                      TX FIFO........: Error       0
CTS..: Force Off                     CLOCK EDGE.....: OK          0
DTR..: Off                           CARRIER DROPPED: Off         0
RTS..: Off









[C]lear Counters [I]nsert Error
```

If your electrical interface type is set for ITU-X.21, then the following screen is displayed.

Figure 7-39: *HSSD Port Status Menu (ITU-X.21)*

```
System ID: DNX-1u No. 1                                          Help = [?]
Sycamore Networks, Inc.            DNX-1u
                                 Port Status
                                 -----------

Port#: 2       Name: Port Name       Type: ITU-X.21

                                                   State  Errored Seconds
Indication: Force Off                RX FIFO........: Error       0
Control...: Off                      TX FIFO........: Error       0
                                     CLOCK EDGE.....: OK          0
                                     CARRIER DROPPED: Off         0









[C]lear Counters [I]nsert Error
```

2. From this screen errored seconds are automatically recorded. A BERT pattern must be turned on in order to insert errors. An error-free port will display zeros in all fields.

3. From the Port Status screen, you can also:
   - Press **C** to clear counters for the individual port.
   - Press **I** to insert an error for the individual port.
   - Press **X** to return to the SYNC Diagnostics screen.

Field Descriptions

Table 7-20 lists the port status fields.

Table 7-20: *Port Status Field Descriptions*

Field	Description
Port#: *(display field)*	Displays the port number for which status is being shown.
Name: *(display field)*	Displays the port name.
Type: *(display field)*	Indicates the type of electrical interface for the port.
Indication: *(display field)* (ITU-X.21 Only)	Displays the indication method used on this port, from the Port Configuration Menu. See Table 5-21 on page 5-95 for further explanation.
Control: *(display field)* (ITU-X.21 Only)	For ITU-X.21, this field replaces the CTS field. It displays the Control Signal configuration used on this port.
DSR: *(display field)*	Displays the The Data Set Ready (DSR) method used on this port, from the Port Configuration Menu. See Table 5-21 on page 5-95 for further explanation. ***Note:*** *DSR is not applicable for ITU-X.21.*
DCD: *(display field)*	Displays the Data Carrier Detect (DCD) method used on this port, from the Port Configuration Menu. See Table 5-21 on page 5-95 for further explanation. ***Note:*** *DCD is not applicable for ITU-X.21.*
CTS: *(display field)*	Displays the Control Signal (CTS) configuration used on this port, from the Port Configuration Menu. See Table 5-21 on page 5-95 for further explanation. ***Note:*** *CTS is not applicable for ITU-X.21.*
DTR: *(display field)*	Displays the Data Terminal Ready (DTR) status of the port. ***Note:*** *DTR is not applicable for ITU-X.21.*
RTS: *(display field)*	Displays the Ready To Send (RTS) status of the port. ***Note:*** *RTS is not applicable for ITU-X.21.*
RX FIFO: *(display field)*	Indicates a Receive FIFO Error. A display of *Error* in the State column indicates a buffer overflow/underflow for port timing relative to fabric timing from the port. The Errored Seconds Column indicates the number of seconds the condition is or was present. A display of *OK* indicates there is not presently a Receive FIFO Error.
TX FIFO: *(display field)*	Indicates a Transmit FIFO Error. A display of *Error* in the State column indicates a buffer overflow/underflow for port timing relative to fabric timing towards the port. The Errored Seconds Column indicates the number of seconds the condition is or was present. A display of *OK* indicates there is not presently a Transmit FIFO Error.
CLOCK EDGE: *(display field)*	Indicates a Clock Edge Error. A display of *Error* in the State column indicates clock edge phase misalignment relative with incoming data, which should be nominally centered. (If over-sampled low speed asynchronous data is being passed, this alarm will occur on occasion, which is expected). The Errored Seconds Column indicates the number of seconds the condition is or was present. A display of *OK* indicates there is not presently a Clock Edge Error.
CARRIER DROPPED: *(display field)*	Displays *On* if the carrier is dropped, or *Off* if it is okay. The Errored Seconds Column indicates the number of seconds the condition is or was present.

Clearing Counters for all HSSD Ports

To clear counters for both HSSD ports simultaneously, follow the procedure below.

From the SYNC Diagnostics screen, press **C** to clear all error counters for all HSSD ports.

Note: *There are no prompts for clearing the counters. All counters are cleared immediately.*

Clearing Counters for a Specific HSSD Port

From the HSSD Port Status screen, you can clear the error counters for an individual HSSD port.

The *Expose* function is used to display the status of HSSD ports and insert errors for diagnostic purposes.

To clear counters for a specific HSSD port, follow the procedure below.

1. From the SYNC Diagnostics screen, press **E** to access the Port Status screen.

   The Port Status screen is displayed.

2. Press **C** to clear a counter for a specific port.

   A message is displayed asking if you clear the link counter.

3. Press **Y**.

   The selected link counter is cleared.

Note: *If you do not first press **E** (Expose) for the individual port before pressing **C** (Clear Counters), ALL port counters will be cleared.*

Inserting Errors

For diagnostic purposes, individual errored seconds can be inserted and momentarily transmitted either directly to a remote unit or looped back to the DNX-1u in order to verify the existence of a loopback or end-to-end BERT test links.

To insert individual errored seconds, follow the procedure below.

1. From the SYNC Diagnostics screen or the Port Status screen (HSSD), press **I** to insert an individual errored second.
2. Press **Y** to insert the error. Once the error is inserted, you are returned to the Port Status Menu, where you can view error status.

Low Speed Asynchronous Data

The Low Speed Asynchronous Data (LSAD) Status and Diagnostic Menu provides access to submenus where you can view the configuration of the LSAD Subsystem as well as viewing its current status.

Navigation:
DNX-1u Main Menu ↓ Status and Diagnostics ↓ Select ASYN

Viewing LSAD Alarm Detail Information

To view LSAD alarm detail information, follow the procedure below.

1. From the System Summary screen move your cursor to **ASYN** and press **A**.

   The Subsystem Alarm Information screen is displayed.

Figure 7-40: *Subsystem Alarm Information Screen*

```
System ID: DNX-1u No. 1                                          Help = [?]
Sycamore Networks, Inc.           DNX-1u
                         Subsystem Alarm Information

    Subsystem: ASYN      Configured Type: Low Speed Async

Subsystem........: Online
In Test..........: No
Error Indicator..: No









                             Port Alarm Information
                             ----------------------
01=None     02=None     03=None     04=None     05=None     06=None
```

2. Press **Esc** to exit out of this screen return to the System Summary screen.

Viewing LSAD Subsystem Information

To view LSAD status information, follow the procedure below.

1. From the System Summary screen select **ASYN**.

   The Async Ports screen is displayed.

Figure 7-41: *Low Speed Asynchronous Data Status and Diagnostics Menu*

```
System ID: DNX-1u No. 1                                          Help = [?]
Sycamore Networks, Inc.          DNX-1u


                                 Async Ports


                             View Configuration
                             View Status
```

2. From this screen you can view the configuration of the LSAD links, conduct LSAD diagnostic tests, and view LSAD link status and statistics. Refer to the sections below to view physical port or logical port status information.

Viewing Configuration Information

The current configuration of the Asynchronous Serial Port Subsystem can be viewed by accessing the Asynchronous Serial Port View Configuration Display.

To view configuration information, follow the procedure below.

1. From the Async Ports screen select **View Configuration**.

   The Asynchronous Serial Port screen is displayed.

2. Select a Port and press **Enter**.

   The specific port configuration information is displayed.

Figure 7-42: *Asynchronous Serial Port View Configuration Display*

```
System ID: DNX-1u No. 1                                          Help = [?]
Sycamore Networks, Inc.            DNX-1u
                          Asynchronous Serial Port


                                                      Line  TCP   Time Out
# Port Name    Baud  Stop Data Parity Protocol        Term  Port  (in Min)
- ---------    ----  ---- ---- ------ --------        ----  ----  --------
1  Out of Service
2 Async-02     9600  1    8    None   Slip
3  Out of Service
4  Out of Service
5  Out of Service
6  Out of Service
```

From this screen you can view the configuration of one LSAD port at a time.

Viewing Status Information

The current status of all LSAD links can be viewed by accessing the Asynchronous Serial Port Status Display.

To view status information, follow the procedure below.

1. From the Async Ports screen select **View Status**.

   The Asynchronous Serial Port Status screen is displayed.

Figure 7-43: *Asynchronous Serial Port Status Screen (Multiple Links)*

```
System ID: DNX-1u No. 1                                          Help = [?]
Sycamore Networks, Inc.            DNX-1u
                        Asynchronous Serial Port Status

    Tx FIFO    Overrun    Parity     Framing    Data Loss  Total      Total
Prt Err/Sec    Err/Sec    Err/Sec    Err/Sec    Err/Sec    In Chars   Out Chars
--- ---------- ---------- ---------- ---------- ---------- ---------- ----------
1   0          0          0          0          0          0          0
2   0          0          0          0          0          0          0
3   0          0          0          0          0          0          0
4   0          0          0          0          0          0          0
5   0          0          0          0          0          0          0
6   0          0          0          0          0          0          0









[C]lear Error Counters
```

Alarm Suppression

The following Major/Minor alarms have been suppressed due to extraneous parity errors. However, their corresponding error counters are maintained. As a result, these traps are suppressed from going off and the RDY LED from turning RED due to these low-level issues, but still allows you to retrieve link diagnostics.

- TX FIFO - Major
- OVERRUN - Minor
- PARITY - Minor
- FRAMING - Minor

Field Descriptions

Table 7-21 lists the field descriptions for LSAD ports.

Table 7-21: *Asynchronous Serial Port Status Display (Multiple Links) Field Descriptions*

Field	Description
TX FIFO Err/Secs: *(display field)*	Displays the number of Transmit FIFO Errored Seconds since the last counter reset.
Overrun Err/Secs: *(display field)*	Displays the number of Receive Overrun Errored Seconds since the last counter reset.
Parity Err/Secs: *(display field)*	Displays the number of Receive Parity Errored Seconds since the last counter reset.
Framing Err/Secs: *(display field)*	Displays the number of Receive Framing Errored Seconds since the last counter reset.
Data Loss Err/Secs: *(display field)*	Displays the number of Data Loss Errored Seconds since the last counter reset.
Total In Chars: *(display field)*	Indicates the number of bytes received by the UART port since the last counter reset.
Total Out Chars: *(display field)*	Indicates the number of bytes transmitted by the UART port since the last counter reset.

LSAD Port Status Display

Detailed status information for an individual link is also available by accessing the Individual Asynchronous Serial Port Status Display.

To access the Asynchronous Serial Port Status screen for an individual port, follow the procedure below.

1. From the Asynchronous Serial Port Status screen, select a specific port and press **Enter**.

   The Asynchronous Serial Port Status screen for the selected port is displayed.

Figure 7-44: *Individual Asynchronous Serial Port Status Screen*

```
System ID:                                                          Help = [?]
Sycamore Networks, Inc.            DNX-1u
                        Asynchronous Serial Port Status

                             Port Number: 1

Async=>Term Data Counters              Uart Error/Second Counters
  Driver Buffer........: 0                Tx FIFO Errors.......: 0
  Async Session Frame..: 0                OverRun Errors.......: 0
  Term Session Buffer...: 0                Parity Errors.......: 0
  Term Session Socket..: 0                Framing Errors.......: 0
                                          Data Loss Errors.....: 0
                                          TCP Overflow Errors..: 0
Term=>Async Data Counters
  Term Session Socket..: 0             Uart Signal Status Counters
  Term Session Frame...: 0                Signal Changes.......: 0
  Async Session Buffer.: 0                Received Breaks......: 0
  Driver Buffer........: 0
  Driver FIFO..........: 0             State.: N/A




[C]lear Error Counters
```

Field Descriptions

Table 7-22 lists the field descriptions for Asynchronous Serial port status.

Table 7-22: *Individual Asynchronous Serial Port Status Screen Field Descriptions*

Field	Description
Input Data Counters	
Driver Buffer: *(display field)*	Displays the number of bytes received by the UART input port driver.
Async Session Frame: *(display field)*	Displays the number of input bytes loaded into frames by Async session process.
Term Session Buffer: *(display field)*	Indicates the number of input bytes loaded into the tport session process data buffer.

Table 7-22: *Individual Asynchronous Serial Port Status Screen Field Descriptions*

Field	Description
Term Session Socket: *(display field)*	Indicates the number of input bytes loaded into the socket by the port server process.
Output Data Counters	
Term Session Socket: *(display field)*	Displays the number of output bytes loaded into the socket by the port server process.
Term Session Frame: *(display field)*	Displays the number of output bytes loaded into frames by the port server process.
Async Session Buffer: *(display field)*	Displays the number of output bytes loaded into the Async session buffer.
Driver Buffer: *(display field)*	Indicates the number of output bytes loaded into the driver buffer.
Driver FIFO: *(display field)*	Indicates the number of output bytes loaded into the UART output FIFO.
Errored Second Counters	
Tx FIFO Errors: *(display field)*	Displays the number of Transmit FIFO error seconds.
OverRun Errors: *(display field)*	Displays the number of Receive overrun error seconds.
Parity Errors: *(display field)*	Displays the number of Receive parity error seconds.
Framing Errors: *(display field)*	Displays the number of Receive framing error seconds.
Data Loss Errors: *(display field)*	Displays the number of Data loss error seconds.
TCP Overflow Errors: *(display field)*	Displays the number of Transmission Control Protocol (TCP) overflow errors.
Signal Status Counters	
Signal Changes: *(display field)*	Indicates the number of times the input handshaking signal changes state.
Received Breaks: *(display field)*	Indicates the number of bre ak commands received.
State	
State: *(display field)*	This field displays the status of the port: • *Connected* - The port is connected. • *Not Connected* - The port is not connected.

Clearing Counters for all LSAD Ports

To clear counters for all LSAD ports simultaneously, follow the procedure below.

From the Asynchronous Serial Port Status screen, press **C** to clear all error counters for all LSAD ports.

Note: *There are no prompts for clearing the counters. All counters are cleared immediately.*

Clearing Counters for a Specific LSAD Port

From the Asynchronous Serial Port Status screen, you can clear the error counters for an individual HSSD port.

To clear counters for a specific LSAD port, follow the procedure below.

1. From the Asynchronous Serial Port Status screen select a specific port and press **Enter**.

   The Asynchronous Serial Port Status screen for the selected port is displayed.

2. Press **C** to clear a counter for a specific port.

   A message is displayed asking if you clear the link counter.

3. Press **Y**.

   The selected link counter is cleared.

Contact Closures

The Contact Closure Status and Diagnostic Menu provides access to submenus where you can view the configuration of the Contact Closure Subsystem as well as viewing its current status. The Contact Closure Status and Diagnostic Menu.

Navigation:
DNX-1u Main Menu ↓ Status and Diagnostics ↓ Select CONT

Viewing Contact Closure Alarm Detail Information

To view contact closure alarm detail information, follow the procedure below.

1. From the System Summary screen move your cursor to **CONT** and press **A**.

   The Subsystem Alarm Information screen is displayed.

Figure 7-45: *Subsystem Alarm Information Screen*

```
System ID: DNX-1u No. 1                                          Help = [?]
Sycamore Networks, Inc.           DNX-1u
                          Subsystem Alarm Information

    Subsystem: CONT     Configured Type: Contact Closures

Subsystem........: Online
In Test..........: No
Error Indicator..: No
                             '--' indicates Contact is Out of Service

Contact Output Information
-------------------------------------------------------------------
A1 Activated           A2 Activated           A3 Activated
B1 Deactivated         B2 Activated           B3 --


Input Status Information
-------------------------------------------------------------------
A1 Inactive      A2 Critical      A3 Major         A4 Minor
A5 Active        A6 --            A7 --            A8 --

B1 --            B2 --            B3 --            B4 --
B5 --            B6 --            B7 --            B8 --
```

2. Press **Esc** to exit out of this screen return to the System Summary screen.

Viewing Contract Closure Subsystem Information

To view contact closure status information, follow the procedure below.

1. From the System Summary screen select **CONT**.

   The Contact Closures screen is displayed.

Figure 7-46: *Contact Closure Status Screen*

```
System ID: DNX-1u No. 1                                          Help = [?]
Sycamore Networks, Inc.           DNX-1u


                                Contact Closures

                                View Configuration
                                Status
```

2. From this screen you can view the configuration of the Contact Closures and view Contact Closure status. Refer to the following sections for more information.

Viewing Configuration Information

The current configuration of the Contact Closure Subsystem can be viewed by accessing the Contact Closures View Configuration Display.

To view configuration information, follow the procedure below.

1. From the Contact Closures screen select **View Configuration**.

   The Contact Closures Configuration screen is displayed.

Figure 7-47: *Contact Closures View Configuration Display*

```
System ID: DNX-1u No. 1                                          Help = [?]
Sycamore Networks, Inc.            DNX-1u
System ID: DNX-1u No. 1                                          Help = [?]
Sycamore Networks, Inc.           DNX-1u
                        Contact Closures Configuration
Contact Outputs:
                Alarm                                   Alarm
#  Name         Activation              #  Name         Activation
-------------------------------------------------------------------------------
A1 ContactOut01 Critical                B1 ContactOut04 Deactivated
A2 ContactOut02 Major                   B2 ContactOut05 Activated
A3 ContactOut03 Minor                   B3 ContactOut06 --

Contact Inputs:

A1 ContactIn01  Low                     B1 ContactIn09  --
A2 ContactIn02  High                    B2 ContactIn10  --
A3 ContactIn03  High                    B3 ContactIn11  --
A4 ContactIn04  High                    B4 ContactIn12  --
A5 ContactIn05  High                    B5 ContactIn13  --
A6 ContactIn06  --                      B6 ContactIn14  --
A7 ContactIn07  --                      B7 ContactIn15  --
A8 ContactIn08  --                      B8 ContactIn16  --


'--' indicates Contact is Out of Service
```

2. From this screen you can view the status of the contact closures. Refer to *Field Descriptions* for more information.

Field Descriptions

Table 7-23 lists the field descriptions for contact closures.

Table 7-23: *Contact Closures Status Display Field Descriptions*

Field	Description
Contact Output Information	
#: *(display field)*	Displays output contact number.
Alarm Activation: *(option field)*	Sets the configured Alarm trigger for the Contact Closure Port. • *Critical* - Enables Critical Alarm for the Output port. • *Major* - Enables Major Alarm for the Output port. • *Minor* - Enables Minor Alarm for the Output port. • *Deactivated* - Enables the Output port as normally opened. • *Activated* - Enables the Output port as normally closed. Indicates an input at its activation level (high or low), but will not generate an alarm. • *Low* - Enables Low level Alarm for the Input port. • *High* - Enables High level Alarm for the Input port.
Service Status: *(option field)*	Sets the current status of the Contact Closure as *Out-of-Service* or *In-Service*. The default setting is *Out-of-Service*.
Contact Input Information	
#: *(display field)*	Displays output contact number.
Alarm Activation: *(option field)*	Sets the configured Alarm trigger for the Contact Closure Port. • *Critical* - Enables Critical Alarm for the Output port. • *Major* - Enables Major Alarm for the Output port. • *Minor* - Enables Minor Alarm for the Output port. • *Inactive* - Enables the Output port as normally opened. Indicates an input is not at its activation level. • *Activated* - Enables the Output port as normally closed. • *Low* - Enables Low level Alarm for the Input port. • *High* - Enables High level Alarm for the Input port.
Service Status: *(option field)*	Sets the current status of the Contact Closure as *Out-of-Service* or *In-Service*. The default setting is *Out-of-Service*.

Viewing Status Information

The current status of the Contact Closure Subsystem can be viewed by accessing the Contact Closure Status Display.

To view status information, follow the procedure below.

1. From the Contact Closures screen select **Status**.

   The Contact Closures Status screen is displayed.

Figure 7-48: *Contact Closures Status Display*

```
System ID: DNX-1u No. 1                                          Help = [?]
Sycamore Networks, Inc.            DNX-1u
                            Contact Closures Status
Contact Outputs:
                Alarm       Alarm                        Alarm       Alarm
#  Name         Activation  Status      #  Name         Activation  Status
-------------------------------------------------------------------------------
A1 ContactOut01 Critical    Alarm       B1 ContactOut04 Deactivated Inactive
A2 ContactOut2  Major       Alarm       B2 ContactOut05 Activated   Active
A3 ContactOut03 Minor       Alarm       B3 ContactOut06 --          --

Contact Inputs:

A1 ContactIn01  Low         Inactive    B1 ContactIn09  --          --
A2 ContactIn02  High        Alarm       B2 ContactIn10  --          --
A3 ContactIn03  High        Alarm       B3 ContactIn11  --          --
A4 ContactIn04  High        Alarm       B4 ContactIn12  --          --
A5 ContactIn05  High        Active      B5 ContactIn13  --          --
A6 ContactIn06  --          --          B6 ContactIn14  --          --
A7 ContactIn07  --          --          B7 ContactIn15  --          --
A8 ContactIn08  --          --          B8 ContactIn16  --          --


'--' indicates Contact is Out of Service
```

2. From this screen you can view the status of the contact closures. Refer to Field Descriptions for more information.

Field Descriptions

Table 7-24 lists the field descriptions for Contact Closures status.

Table 7-24: *Contact Closures Status Display Field Descriptions*

Field	Description
Contact Outputs	
#: *(display field)*	Displays output contact number.
Name: *(display field)*	Displays the name used to identify the Output Contact Closure, up to 12 alphanumeric characters.
Alarm Activation: *(display field)*	Displays the configured Alarm trigger for the Output Contact Closure port, either: • *Critical* - Enables Critical Alarm for the Output port. • *Major* - Enables Major Alarm for the Output port. • *Minor* - Enables Minor Alarm for the Output port. • *Open* - Enables the Output port as normally opened. • *Close* - Enables the Output port as normally closed.
Alarm Status: *(display field)*	Indicates the current status of the alarm for the contact, either *Inactive* or *Active*.
Contact Inputs	
#: *(display field)*	Displays input contact number.
Name: *(display field)*	Displays the name used to identify the Input Contact Closure, up to 12 alphanumeric characters.
Alarm Activation: *(display field)*	Displays the configured Alarm trigger for the Input Contact Closure port, either: • *Low* - Enables Low level Alarm for the Input port. • *High* - Enables High level Alarm for the Input port.
Alarm Status: *(display field)*	Indicates the current status of the alarm for the contact, either *Off* or *On*.

Voltage Measurement

The Voltage Measurement Status Menu provides access to submenus to view the configuration of the Voltage Measurement Subsystem as well as viewing its current status.

Navigation:
DNX-1u Main Menu ↓ Status and Diagnostics ↓ Select VOLT

Viewing Voltage Measurement Alarm Detail Information

To voltage measurement alarm detail information, follow the procedure below.

1. From the System Summary screen move your cursor to **VOLT** and press **A**.

   The Subsystem Alarm Information screen is displayed.

Figure 7-49: *Subsystem Alarm Information Screen*

```
System ID: DNX-1u No. 1                                          Help = [?]
Sycamore Networks, Inc.           DNX-1u
                         Subsystem Alarm Information


    Subsystem: VOLT     Configured Type: Voltage Measure

Subsystem........: Online
In Test..........: No
Error Indicator..: No









                            Port Alarm Information
                            ----------------------
01=None     02=None     03=None     04=None     05=None     06=None
07=None     08=None
```

2. Press **Esc** to exit out of this screen return to the System Summary screen.

Viewing Voltage Measurement Subsystem Information

To view voltage measurement information, follow the procedure below.

1. From the System Summary screen select **VOLT**.

   The Voltage Measurements screen is displayed.

Figure 7-50: *Voltage Measurements Status Menu*

```
System ID: DNX-1u No. 1                                          Help = [?]
Sycamore Networks, Inc.            DNX-1u


                              Voltage Measurements

                                View Configuration
                                Status
```

2. From this screen you can view the configuration of the Voltage Measurement Channels and view Voltage Measurement status. Refer to the following sections for more information.

Viewing Configuration Information

The current configuration of the Voltage Measurement Subsystem can be viewed by accessing the Voltage Measurements Configuration Display.

To view configuration information, follow the procedure below.

1. From the Voltage Measurements screen select **View Configuration**.

   The Voltage Measurements Configuration screen is displayed.

Figure 7-51: *Voltage Measurements View Configuration Display*

```
System ID: DNX-1u No. 1                                          Help = [?]
Sycamore Networks, Inc.            DNX-1u
                       Voltage Measurements Configuration

                   Input   Lower  Upper
#    Name          Type    Limit  Limit
-------------------------------------------------------------------------------
1-2  VoltMeasure1  Dual    -49.0  -46.0
3    VoltMeasure3 ** Out of Service **
4    VoltMeasure4 ** Out of Service **
5    VoltMeasure5 ** Out of Service **
6    VoltMeasure6 ** Out of Service **
7    VoltMeasure7 ** Out of Service **
8    VoltMeasure8 ** Out of Service **
```

2. From this screen you can view the configuration of the voltage measurement system configuration. Refer to *Field Descriptions* for more information.

Field Descriptions

Table 7-25 lists the field descriptions for voltage measurement configuration.

Table 7-25: *Voltage Measurement Configuration FIeld Descriptions*

Field	Description
Port #: *(display field)*	Displays the voltage measurement channel number(s) being configured, from *1* to *8* for a single-ended measurement setup or two digits separated by a dash for a dual (differential) measurement setup.
Input Type: *(option field)*	Specifies the type of measurement to be conducted, either: • *Single*-ended measurement with respect to the system ground • *Dual* - The difference between two single-ended inputs (Differential). The default setting is *Single*.
Name: *(text field)*	Specifies the name used to identify the Voltage Measurement Channel, up to 12 characters. The default is *VoltMeasureX*, where *X* equals the channel number.
Service Status: *(option field)*	Sets the current status of the Voltage Measurement Channel as *Out-of-Service* or *In-Service*. The default setting is *Out-of-Service*.
Lower Limit: *(option field)*	Sets configurable lower limit boundary of the Voltage Measurement Channel; can be set anywhere from *0-60* volts in 0.1 volt increments. The default setting is *00.0*.
Upper Limit: *(option field)*	Sets configurable upper limit boundary of the Voltage Measurement Channel; can be set anywhere from *0-60* volts in 0.1 volt increments. The default setting is *00.0*.

Viewing Status Information

The current status of the Voltage Measurement Subsystem can be viewed by accessing the Voltage Measurements Status Display.

To view status information, follow the procedure below.

1. From the Voltage Measurements screen select **Status**.

   The Voltage Measurements Status screen is displayed.

Figure 7-52: *Voltage Measurement Status Display*

```
System ID: DNX-1u No. 1                                          Help = [?]
Sycamore Networks, Inc.            DNX-1u
                          Voltage Measurements Status

                    Input   Lower  Upper  Actual   Alarm
#    Name           Type    Limit  Limit  Voltage  Status
-------------------------------------------------------------------------------
1-2  VoltMeasure1  Dual    -49.0  -46.0  -47.834  Off
3    VoltMeasure3 ** Out of Service **
4    VoltMeasure4 ** Out of Service **
5    VoltMeasure5 ** Out of Service **
6    VoltMeasure6 ** Out of Service **
7    VoltMeasure7 ** Out of Service **
8    VoltMeasure8 ** Out of Service **
```

2. The Voltage Measurement Status Display is a read-only screen. Refer to *Field Descriptions* for additional information.

Field Descriptions

Table 7-26 lists the field descriptions for Voltage Measurement status.

Table 7-26: *Voltage Measurement Status Display Field Descriptions*

Field	Description
#: *(display field)*	Displays the voltage measurement channel number(s) being configured, from *1* to *8* for a single-ended measurement setup or two digits separated by a dash for a dual (differential) measurement setup.
Name: *(display field)*	Displays the name used to identify the voltage measurement channel, up to 12 alphanumeric characters.
Input Type: *(display field)*	Specifies the type of measurement conducted, either: • *Single* - A single-ended measurement with respect to the system ground. • *Dual* - The difference between two single-ended inputs (Differential).
Lower Limit: *(display field)*	Displays the configured lower limit boundary of the voltage measurement channel.
Upper Limit: *(display field)*	Displays the configured upper limit boundary of the voltage measurement channel.
Actual Voltage: *(display field)*	Displays the actual voltage being detected at the present time.
Alarm Status: *(display field)*	Displays *On* if an alarm is sent due to the voltage being outside of the configured limits. A display of *Off* indicates the detected voltage falls within the configured limits.

Ambient Temperature

Temperature Sensor Status (estimated ambient temperature) can be viewed by accessing the Temperature Sensor Status Display.

Navigation:
DNX-1u Main Menu ↓ Status and Diagnostics ↓ Select TEMP

Viewing Ambient Temperature Alarm Detail Information

To view ambient temperature alarm detail information, follow the procedure below.

1. From the System Summary screen move your cursor to **TEMP** and press **A**.

   The Subsystem Alarm Information screen is displayed.

Figure 7-53: *Subsystem Alarm Information Screen*

```
System ID: DNX-1u No. 1                                          Help = [?]
Sycamore Networks, Inc.           DNX-1u
                          Subsystem Alarm Information

    Subsystem: TEMP     Configured Type: Ambient Temp
                                  ----Critical Alarms------
Subsystem........: Online         Temperature out of range........: No
```

2. Press **Esc** to exit out of this screen return to the System Summary screen.

Viewing Ambient Temperature Subsystem Information

To view Ambient temperature information, follow the procedure below.

1. From the System Summary screen select **TEMP**.

   The Temperature Sensor Main Menu is displayed.

Figure 7-54: *Temperature Sensor Main Menu*

```
System ID: DNX-1u No. 1                                          Help = [?]
Sycamore Networks, Inc.            DNX-1u


                           Temperature Sensor Main Menu

Estimated Ambient Temperature: 26 C,  78 F
```

The Estimated ambient temperature is the only item provided on this display.

Transcoder

Transcoder Configuration status (transcoder compression rate) can be viewed by accessing the Transcoder Configuration Status Display as shown below.

Navigation:
DNX-1u Main Menu ↓ Status and Diagnostics ↓ Select TCODER

Viewing Transcoder Alarm Detail Information

To transcoder alarm detail information, follow the procedure below.

1. From the System Summary screen move your cursor to **TCODER** and press **A**.

   The Subsystem Alarm Information screen is displayed.

Figure 7-55: *Subsystem Alarm Information Screen*

```
System ID: DNX-1u No. 1                                          Help = [?]
Sycamore Networks, Inc.           DNX-1u
                         Subsystem Alarm Information


    Subsystem: TCODER     Configured Type: Transcoder
                                  ----Critical Alarms------
Subsystem........: Online
In Test..........: No
Error Indicator..: No









                           Port Alarm Information
                           -----------------------
01=None
```

2. Press **Esc** to exit out of this screen return to the System Summary screen.

Viewing Transcoder Subsystem Information

To view Transcoder information, follow the procedure below.

1. From the System Summary screen select **TCODER**.

   The Transcoder Configuration screen is displayed.

Figure 7-56: *Transcoder Configuration Status Display*

```
System ID: DNX-1u No. 1                                          Help = [?]
Sycamore Networks, Inc.            DNX-1u
                            Transcoder Configuration

Transcoder Compression Rate: 32 kbps (2:1)
```

The Transcoder compression rate is the only item provided on this display.

Power Supply

Power Supply status can be viewed by accessing the Power Supply Status Display.

Navigation:
DNX-1u Main Menu ↓ Status and Diagnostics ↓ Select PS-A or PS-B

Viewing Power Supply Alarm Detail Information

To Power Supply alarm detail information, follow the procedure below.

1. From the System Summary screen move your cursor to **PS-A** or **PS-B** and press **A**.

   The Power Supply Alarm Information screen is displayed.

Figure 7-57: *Power Supply Alarm Information Screen*

```
System ID: DNX-1u No. 1                                          Help = [?]
Sycamore Networks, Inc.           DNX-1u
                         Power Supply Alarm Information

    Subsystem: PS-B     Configured Type: Power
                                   ----Critical Alarms------
Subsystem........: Online           Subsystem Module:......: Present
                                    Power Supply Problem:...: Ok
                                    Fan Status..............: Ok
```

2. Press **Esc** to exit out of this screen return to the System Summary screen.

Viewing Power Supply Information

To view power supply information, follow the procedure below.

1. From the System Summary screen select **PS-A** or **PS-B**.

   The Power Supply Main Menu is displayed.

Figure 7-58: *Power Supply Status Display*

```
System ID: DNX-1u No. 1                                          Help = [?]
Sycamore Networks, Inc.            DNX-1u


                              Power Supply Main Menu

Power Supply A              Present        Status       State
-------------------------------------------------------------------------------
Power Supply                  Yes            OK           --
Fan                           Yes            OK
```

The Power Supply Status Display is a read-only screen. Refer to *Field Descriptions* for additional information.

Field Descriptions

Table 7-27 lists the field descriptions for Power Supply status.

Table 7-27: *Power Supply Status Display Field Descriptions*

Field	Description
Power Supply Fields	
Present: *(display field)*	Displays *Yes* if Power Supply is presently installed and *No* if not installed.
Status: *(display field)*	Displays *OK* if the power supply is installed and functioning properly. Displays *NotOK* if an error has occurred, such as a configuration mismatch.
State: *(display field)*	Displays the current operational state of the power supply.
Fan Fields	
Present: *(display field)*	Displays *Yes* if the fan is presently installed and *No* if not installed.
Status: *(display field)*	Displays *OK* if the fan is functioning properly. Displays *NotOK* if the fan is malfunctioning, such as not spinning.
State: *(display field)*	Indicates the current operational state of the fan.

THIS PAGE INTENTIONALLY LEFT BLANK.

Section 8
Events

Introduction

An event is the report of an occurrence in the DNX-1u. The system generates events for reasons, such as configuration changes, test commands and system changes. The DNX-1u maintains a log for approximately 2,000 of the most recent events. When an event occurs, it is time and date stamped and given a sequence number. The subsystem associated with the event, as well as a description of the event are also recorded and displayed. Refer to "Events List" on page 8-11 for a listing of all the DNX-1u events and a description of each event.

The Event Menu provides access *three* submenus from which you can monitor events, display the event log, and configure event reporting. Events can be displayed by selecting Monitor Events or the Display Event Log from the Events Menu. The primary differences between the Monitor Events and Display Event Log is that Monitor Events is a pseudo real-time view of the Alarms as they occur, while the Display Events Log is historical information that can also be filtered by a number of different options.

Since the DNX-1u has a finite number of events that can logged within the local memory, it is equipped with the capability to send events to an external SYSLOG Server. This function can be configured by selecting Event Configuration from the Event Menu. Refer to "Event Configuration" on page 8-9 for details.

The Event Menu and its submenu structure is illustrated in Figure 8-1.

Figure 8-1: *Event Menu Structure*

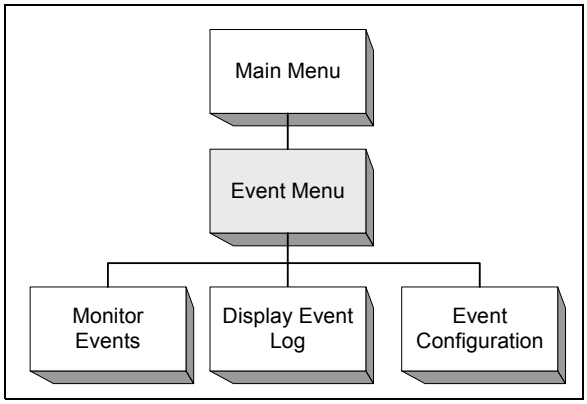

Event Menu

The Event Menu allows you display, monitor and configure event information.

Navigation:
DNX-1u Main Menu ↓ Events

Accessing Event Information

1. From the DNX-1u Main Menu, click on **Events**.

   The Event Menu is displayed.

Figure 8-2: *Event Menu*

```
System ID: DNX-1u No. 1                                          Help = [?]
Sycamore Networks, Inc.              DNX-1u


                                    Event Menu



                              Monitor Events
                              Display Event Log
                              Event Configuration
```

From this menu you can monitor events in pseudo real-time, display the Event Log, and configure remote reporting of events.

Monitoring Events

This function allows you to monitor DNX-1u events as they occur. A single screen of events is displayed, and new events are added to the top of the list approximately every 10 seconds.

Navigation:
DNX-1u Main Menu ↓ Events ↓ Monitor Events

Monitoring Events

To monitor events, follow the procedure below.

1. From the Event Menu select **Monitor Events**.

   The System Events screen is displayed.

Figure 8-3: *System Events Display*

```
System ID: DNX-1u No. 1                                          Help = [?]
Sycamore Networks, Inc.             DNX-1u
                                 System Events

Seq  Time  Date  Source     Event
---  ----  ----  ---------  -------------------------------------------
0037 10:14 04/27 1.SYS      blb >> UserMgr, add user - test2
0036 10:13 04/27 1.SYS      LOGIN user - barry (login total: 1)
0035 10:13 04/27 1.SYS      LOGOUT user - DefaultUser (login remains: 0)
0034 10:12 04/27 1.SYS      def >> UserMgr, add user - barry
0033 08:06 04/27 1.CONT     Output Contact 1(ContactOut01) Alarm OFF!
0032 08:06 04/27 1.SYS      Subsystem 1.PS-B reporting
0031 08:06 04/27 1.SYS      Subsystem 1.PS-A reporting
0030 08:06 04/27 1.SYS      Subsystem 1.TCODER reporting
0029 08:06 04/27 1.SYS      Subsystem 1.TEMP reporting
0028 08:06 04/27 1.SYS      Subsystem 1.VOLT reporting
0027 08:06 04/27 1.SYS      Subsystem 1.CONT reporting
0026 08:06 04/27 1.SYS      Subsystem 1.ASYN reporting
0025 08:06 04/27 1.SYS      Subsystem 1.SYNC reporting
0024 08:06 04/27 1.SYS      Subsystem 1.ROUTER reporting

[C]lear event log               >> indicates Audit Trail Event
```

>> *indicates an Audit Trail Event* and is used to track a user's operation of the system. Adding, deleting or changing user configuration information is considered an audit trail event. Audit trail event messages start with the audit trail identifier of the initiating user, and then **>>** to indicate an audit trail message.

2. To clear the Events List press **C**.

Field Descriptions

Table 8-1 lists the field descriptions for the System Events screen.

Table 8-1: *System Events Display Field Descriptions*

Field	Description
Seq: *(display field)*	Indicates the order in which an event occurred.
Time: *(display field)*	Displays the time that an event occurred in 24-hour format.
Date: *(display field)*	Displays the date when an event occurred
Source: *(display field)*	Indicates the originator of the event message, such as T1/E1 Module B.
Event: *(display field)*	Displays a brief description of the event.

Event Log

The Display Event Log function allows you to view the most recent DNX-1u events. Events that occur while in the Display Event Log menu are added to the event log but not updated on the screen. You must refresh the screen to view the latest events.

Navigation:
DNX-1u Main Menu ↓ Events ↓ Display Event Log

Displaying the Event Log

To display the events log, follow the procedure below.

1. From the Event Menu select **Display Event Log**.

   The Event log is displayed.

Figure 8-4: *Event Log Display*

```
System ID: DNX-1u No. 1                                          Help = [?]
Sycamore Networks, Inc.             DNX-1u
Seq  Time  Date  Source     Event
---  ----  ----  ---------  ----------------------------------------------------
0033 08:06 04/27 1.CONT     Output Contact 1(ContactOut01) Alarm OFF!
0032 08:06 04/27 1.SYS      Subsystem 1.PS-B reporting
0031 08:06 04/27 1.SYS      Subsystem 1.PS-A reporting
0030 08:06 04/27 1.SYS      Subsystem 1.TCODER reporting
0029 08:06 04/27 1.SYS      Subsystem 1.TEMP reporting
0028 08:06 04/27 1.SYS      Subsystem 1.VOLT reporting
0027 08:06 04/27 1.SYS      Subsystem 1.CONT reporting
0026 08:06 04/27 1.SYS      Subsystem 1.ASYN reporting
0025 08:06 04/27 1.SYS      Subsystem 1.SYNC reporting
0024 08:06 04/27 1.SYS      Subsystem 1.ROUTER reporting
0023 08:06 04/27 1.SYS      Subsystem 1.T1E1-B reporting
0022 08:06 04/27 1.SYS      Subsystem 1.T1E1-A reporting
0021 08:06 04/27 1.SYS      LOGIN user - DefaultUser (login total: 1)
0020 08:06 04/27 1.T1E1-A   Port 02 is Online
0019 08:06 04/27 1.T1E1-A   Port 01 is Online
0018 08:06 04/27 1.T1E1-A   Port 02 is Up
0017 08:06 04/27 1.T1E1-A   Port 01 is Up

Event log Filter: Not Active
[R]efresh [N]ext page [P]revious page [L]ast page [F]ilter [C]lear event log
```

2. From this screen you can **R**efresh, **F**ilter and **C**lear event logs. Table 8-2 lists the Event Log hot keys and their functions.

Table 8-2: *Event Log Hot Keys*

Key	Function
[R]efresh	Refreshes the display in order for the latest events to be displayed.
[N]ext page	Displays the next page of (older) events.
[P]revious page	Displays the previous page of (newer) events.
[L]ast page	Displays the last page of events
[F]ilter	Opens the Event Filter Menu, where you can enter a key word to search for a particular event. See the procedure below.
[C]lear event log	Clears all entries from the Event Log (and logs the clear as a new event).

Clearing an Event Log

There are *two* ways to clear the Event Log - either from the System Events screen or from the Event Log screen.

To clear an event log, follow the procedure below.

1. From the System Events screen, press **C** to clear the event log.

   OR

2. From the Event screen, press **C** to clear the event log.

   The Event log is cleared.

Note: *There are no prompts for clearing the Event Log. The log is cleared immediately.*

Filtering an Event Log

Using the Filter function, you can search the Event Log for a particular type of event. Events can be searched by all events for a keyword related to the event. Any events not containing the specified keyword will not be displayed.

To filter the Event log, follow the procedure below.

1. From the Event screen, press **F** to filter the event log.

   The Event Filter Menu displayed.

Figure 8-5: *Event Log*

```
System ID: DNX-1u No. 1                                          Help = [?]
Sycamore Networks, Inc.              DNX-1u


                              Event Filter Menu



                        Filter event log enabled....: No
                        Search for the word:
```

2. Move your cursor to the *Filter event log enabled* field, press **Enter** to toggle to *Yes*.
3. Move your cursor to the *Search for the word* field and press **Enter**, then type in the keyword you want to search for, then press **Enter** again.
4. Press **X** to begin the search.

   A screen similar to the one below is displayed.

Figure 8-6: *Filtered Event Log*

```
System ID: DNX-1u No. 1                                          Help = [?]
Sycamore Networks, Inc.                DNX-1u
Seq  Time  Date  Source     Event
---  ----  ----  ---------  ----------------------------------------------------
0033 08:06 04/27 1.CONT     Output Contact 1(ContactOut01) Alarm OFF!
0006 08:06 04/27 1.CONT     Output Contact 1(ContactOut01) Alarm ON!

Event log Filter: Search for 'Contact'
[R]efresh [N]ext page [P]revious page [L]ast page [F]ilter [C]lear event log
```

5. The Filtered Event log displays all of the events that contain the filter keyword, which is displayed in the Event Log Filter field near the bottom of the display. In the example above, the keyword was “Contact”.

6. Press **F** to return to the Event Filter Menu.

7. At the Event Filter Menu, press **Enter** to toggle the **Filter event log enabled** field to No, then press **X**.

   You are returned to the unfiltered Event Log, which displays all events.

Event Configuration

The Event Configuration Menu allows you to configure the DNX-1u to send events to a PC or workstation as they occur. In order to perform this function, you must first have a SysLog program installed and running on your PC or workstation.

Navigation:
DNX-1u Main Menu ↓ Events ↓ Display Event Log

Configuring Events

To configure events, follow the procedure below.

1. From the Event Menu select **Event Configuration**.

   The Event Configuration Menu is displayed.

Figure 8-7: *Event Configuration Menu*

```
System ID: DNX-1u No. 1                                          Help = [?]
Sycamore Networks, Inc.              DNX-1u

                            Event Configuration Menu




                    Log events to syslog....: No
                    Syslog server IP address: 0.0.0.0
                    Identifier..............:
```

2. Populate this screen with specific map information. For information on these fields, refer to the following section *Field Descriptions*.
3. When complete press **X**.

   A message is displayed asking if you want to update the configuration.
4. Press **Y**.

   The event information is configured.

Field Descriptions

Table 8-3 lists the field descriptions for configuring events.

Table 8-3: *Event Configuration Menu Field Descriptions*

Key	Function
Log events to syslog: *(option selection)*	Select *Yes* or *No* to send the event data to a host PC or workstation.
Syslog server IP Address: *(option selection)*	Indicates the IP address of the Syslog Server you want to send the event data.
Identifier: *(option selection)*	Specifies the name to identify the specific DNX-1u unit, up to 19 alphanumeric characters.

Events List

Table 8-4 lists each of the events that can display during a DNX-1u session. It lists the text of each event, in alphabetical order and provides a description of each event. Variables are shown in parentheses.

Note: *Some of the events could not be listed in alphabetical order because they begin with a variable. Most of these are listed at the end of the table; however, those events that begin with the three-character audit trail identifier are listed in alphabetical order according to the text immediately following the audit trail identifier. Example: where "adm" is the user's audit trail identifier, the event "**adm >> Port 01, turned Bert on**" is alphabetized using the word "Port".*

Table 8-4: *DNX-1u List of Events and Descriptions*

Event Text	Description
*****Could not access Pro-Chl Framer*****	The system is not ready for APS.
Accept error a call in CXotMgr	XOT Error: Cannot reach the remote IP address.
AckConfirm from (IP address) Too Big! Len=(length)!	Acknowledgement from ENvision Plus is larger than the specified length.
Add Listen Connection - Invalid Source Connection	An error has occurred in adding the listen connection due to an invalid source connection.
Add Listen Connection Failed	The system failed to add the listen connection.
ADD LSA: id (linkid) rtid (rtid) area (areaid) type (lsatype)	OSPF LSA TRACE: Adding LSA with link ID (linkid), router ID (rtid), area ID (areaid), and LSA type (lsatype) to LSA database.
Address already in use (ip address)	The system failed to assign an IP address because the address is already in use.
AGNTY Msg to Device 200.0.(Unit #.Slot #) Timed out!	Device 200.0. (Unit.Slot#) is not responding to SNMP agent request.
All Contact Closures In Service!	The user listed has configured all contact closures to In Service at the configuration.
All Contact Closures Out Of Service!	The user listed has configured all contact closures to Out of Service at the configuration.
All Voltage Measurement Ports In Service!	The user listed has configured all voltage measurement ports to In Service.
All Voltage Measurement Ports Out Of Service!	The user listed has configured all voltage measurement ports to Out of Service.
APS - Group (#) - Switch from Pri to Sec Link	The APS (group #) has been switched from primary to secondary link.
APS - Group (#) - Switch from Sec to Pri Link	The APS (group #) has been switched from secondary to primary link.
APS - Invalid Link for Connection	APS has an invalid link for connection.
APS Fail create Connection - cfg mismatch	APS failed to create a connection because of a configuration mismatch.

Table 8-4: *DNX-1u List of Events and Descriptions (Continued)*

Event Text	Description
APS Fail create Connection - not valid cfg	APS failed to create a connection because the configuration is not valid.
APS Fail create LCon - not valid cfg	APS failed to create a listen connection because the configuration is not valid.
APS Fail to create full duplex con.	APS failed to create a full duplex connection.
APS Fail to create listen con.	APS failed to create a listen connection.
APSCfgMgr - Cfg file does not exist	An error has occurred in loading the APS configuration because the configuration file does not exist.
APSCfgMgr - Cfg file does not exist; use default	An error has occurred in reloading the APS configuration because the configuration file does not exist. Use the default.
APSCfgMgr - ReLoaded (filename)	The APS configuration has been reloaded.
APSMGR - Port (#) remote switch cmd rejected	APS error: Failure to switch - The remote switchover command was rejected for Port (#).
APSMGR - Port (#) revertive switch successful	The APS revertive switchover has been successful on Port (#).
Async/Terminal Server Active	Initialization is complete and the async/terminal server is now active.
AsyncCfg configuration updated	The asynchronous serial port configuration is updated.
AsyncCfg file being created	The Asynchronous Serial Port Configuration file is not on this system and is being created.
AsyncCfg file: Upgrading version (current file version) => (current configuration version)	The Asynchronous Serial Port Configuration file is being upgraded to a newer version.
AsyncCfg read file open failed	An error has occurred in loading the Asynchronous Serial Port Configuration.
AsyncCfg SaveCfg write file open failed	An error has occurred in saving the Asynchronous Serial Port Configuration.
AsyncCfg write file open failed	An error has occurred in saving Asynchronous Serial Port Configuration.
Asyncdrive InstanceValue out of range	An error has occurred in initializing the asynchronous drive because the instance value is out of range.
AsyncFrm - get frame error, data lost!!	An error has occurred in loading asynchronous data frame. The user must get the frame error because data is lost.
bad addr len from (type)	Hardware address length in the DHCP packet of the DHCP client is incorrect. The client Ethernet address length did not equal 6 octets.
Boot Download Ended	The boot download has ended.
Boot flash did not program properly.	The boot flash did not program properly.
bootpr: ERROR! UDP port already in use!	An error has occurred in initializing the bootp relay because the UDP port already in use.

Table 8-4: *DNX-1u List of Events and Descriptions (Continued)*

Event Text	Description
BP Fail to create Conn loopback	The backplane failed to create the connection loopback because the connection already exists.
Bts assignment error - Dest doesn't support TSFM	An error has occurred in adding a listen connection because the Dest does not support TSFM.
Bts assignment error - Not enough AuxRead Timeslots available	An error has occurred in adding a listen connection because not enough AuxRead timeslots are available.
Bts assignment error - Src doesn't support TSFM	A backplane timeslot assignment error has occurred because the source does not support TSFM.
Bts assignment error - Src Info not valid	An error has occurred in adding a listen connection because the source information is not valid.
Bts assignment error!	A backplane timeslot assignment error has occurred.
BUS ERROR(error #): address (address in hex)	An error has occurred on the DNX-1u main bus (error #): address (address in hex).
Call from unknown address (address)	An XOT call was received from an unknown address (address).
Can not allocate memory for program transfer	The system failed to set up flash RAM for program download and cannot allocate memory for program transfer.
Cannot connect call from (address)	The system cannot connect the call from (address).
Card in slot (slot text) present	The card in slot (slot text) is now present.
CfgMgr - ReLoaded (filename)	The filename (filename) has been reloaded with T1/E1 configuration.
CfgMgr - Slot (Unit #.Slot #) Cfg file does not exist; use default	An error has occurred in loading (Unit #.Slot #) T1/E1 configuration because the configuration file does not exist. Use the default.
CfgMgr, loaded default configuration	The system loaded the default T1/E1 configuration.
Checksum mismatch: (expected- checksum) (rcv'd- checksum)	An error has occurred in restoring the database backup file. A Checksum mismatch (expected- checksum) (received- checksum) has been received.
Clock Source Config changed via SNMP	The user listed has changed the clock source configuration using SNMP.
Clock Source Config changed.	The user listed has changed the clock source configuration.
Clock source is (slot type) port-(#)	The current clock source is (slot type) (port #).
Clock state is free-run	The current clock state is free-run.
Clock state is normal	The current clock state is normal.
Command aborted. No such filter: <filternum>	When using the CLI command: use access-list <filternum> command and the filter <filternum> is not defined the command aborts.
ConnBtsMap (#) Exceeded Max (max #) for slot (#)	The connection map (#) exceeded the maximum allowed connections (max #) for slot (#).
Connection (name) Deleted	The user listed has deleted a connection map (name).

Table 8-4: *DNX-1u List of Events and Descriptions (Continued)*

Event Text	Description
Connection BtsMap (#) Exceeded for slot (#)	The connection map (#) exceeded the maximum allowed connections for slot (#).
ConnReq: slot (unit #.slot #) will be sent an empty map	An error has occurred in processing the connection request because of a different physical and configured slot type. The slot will be sent an empty map.
Contact Closure File Open Error!	An error has occurred in saving the contact closure configuration because the system failed to open the file.
Converting bts file (filename) completed!	The system completed converting the backplane timeslot file (filename).
Converting bts file (filename) failed!!!!!!!!!	An error has occurred in converting the backplane timeslot file (filename).
Copy Map (ID) to Map (ID) completed successfully	The user listed has initiated a Copy Map command and the task completed successfully.
Copy Map (ID) to Map (ID) failed	The user listed has initiated a Copy Map command, but the task failed.
Copy Map (ID) to Map (ID) is in progress	The user listed has initiated a Copy Map command and it is in progress.
Could not find Xot for incoming call in CXotMgr	The system could not find XOT for an incoming call.
Couldn't Create Backup File, Operation Aborted!	An error has occurred in creating a database backup file. The database backup operation aborted!
Couldn't determine client identifier	The system could not determine the client identifier in the DHCP request.
CreateNewConnFile - index file (filename) open failed -	An error has occurred in creating a new connection file. The system failed to open the file (filename).
DB Backup error: couldn't create backup file	An error has occurred in creating the database backup file.
DB backup operation to host # was successful	The database backup operation to (host #) was successful.
DB Backup to Host # @ (file path)	The database backup to (host #) at (file path) is complete.
DB Backup-Host #: directory name is not given	The system failed to backup the database to host. The directory name is not given.
DB Backup-Host #: file name is not given	The system failed to backup the database to host. The file name is not given.
DB Backup-Host #:up to 8 characters file name, no extension	The system failed to backup the database to host. There are more than eight characters in the file name and no extension is allowed.
Delete All Conn Ports failed!	An error has occurred in deleting the connection by port for all ports after a Copy Port Configuration to all ports command.
DeleteConnRecord Error - Connection File Open failed	An error has occurred in deleting a connection. The system failed to open the Connection File.

Table 8-4: *DNX-1u List of Events and Descriptions (Continued)*

Event Text	Description
DEL LSA: id (linkid) rtid (rtid) area (areaid) type (lsatype)	OSPF LSA TRACE: Deleting LSA with link ID (linkid), router ID (rtid), area ID (areaid), and LSA type (lsatype) from LSA database.
Device Cold Reset	The device went through a cold reset.
Device Warm Reset	The device went through a warm reset.
dhcp - duplicated IP assigned for IP # (IP address)	An error has occurred in loading the DHCP configuration. A duplicated IP address was assigned for IP number (IP address).
dhcp.cfg file is corrupted, unable to reload	An error has occurred in loading the DHCP configuration. The dhcp.cfg file is corrupted and unable to reload.
dhcpd: ERROR! UDP port already in use!	An error has occurred in initializing the DHCP. The UDP port is already in use.
do_bad_ls_req	OSPF NEIGHBOR TRACE: Handling bad-ls-request event.
DRAM Failed A:(failed address) W:(written pattern) R:(read pattern)	A DRAM test failed during startup at (failed address) (written pattern) (read pattern).
duplicate host name	An error has occurred in loading the DHCP configuration because a duplicate host name was assigned.
duplicate hw address	An error has occurred in loading the DHCP configuration because a duplicate hardware address was assigned.
electDR: circ (circuit) dr = (dr) bdr = (bdr)	OSPF DESIGNATED ROUTER TRACE: (dr) elected designated router and (bdr) elected backup designate router on circuit (circuit).
ENvision Plus Config changed	The user listed has changed the ENvision Plus configuration.
Eplus Routing Completed.	The ENvision Plus routing is completed.
Eplus Routing Started.	The ENvision Plus routing has started.
Err reading (network config filename) file, loading Default Cfg	An error has occurred in loading the Network Management configuration file. The system failed to read the file and is loading the default configuration file.
Err writing (network config filename) file, Cfg not Saved!	An error has occurred in saving the Network Management configuration file. The system failed to write the file and the configuration was not saved.
Error - Can't open (filename) file for write	An error has occurred in saving the SNMP trap client configuration. The system cannot open (filename) file.
Error binding socket in CXotMgr	An error has occurred in binding socket in XOT call.
Error creating socket in CXotMgr	An error has occurred creating the socket for inbound XOT call.
Error in parsing options	A DHCP server error has occurred in parsing options.
Error in ram file system: Failed for lfs flash verification	An error has occurred in the RAM file system flash verification.
Error listening socket in CXotMgr	An error has occurred in the listening socket in an XOT call.

Table 8-4: *DNX-1u List of Events and Descriptions (Continued)*

Event Text	Description
ERROR: Comet RPLS Register Programming Failure!!!	The system failed to configure the RPLS equalizer.
ERROR:Async config not added to logp.sum file	An error has occurred in updating the async/terminal server configuration. The configuration was not added to logp.sum file.
ES Alert (#) has been cleared on P1.(Channel #).(Channel #)	The threshold profile was set to alarm. ES (alert #) has been cleared on (port #).
ES Alert (#) has been cleared on P1.(slot #.Channel #)"	The threshold profile was set to informational. The ES (alert #) has been cleared on (port #).
ES Alert (#) has been reached on P1.(Slot #.Channel #)	Alarm trap occurred. ES (alert #) has been reached at (port #).
ES Alert (#) has been reached on P1.(Slot #.Channel #)	Informational trap occurred. ES (alert #) has been reached at (port #).
Event log cleared by operator	The event log has been cleared by the operator.
Failed DB Backup to Host #, Error: (transfer result in hex), see event log	The system failed to backup the database to (host #). Error: (transfer result in hex). The transfer results are listed below: • *0x81* - TFTP No File Error • *0x82* - TFTP Access Error • *0x83* - TFTP Full Error • *0x84* - TFTP Error • *0x85* - TFTP Tid Error • *0x86* - TFTP Exists Error • *0x87* - TFTP No User Error • *0x88* - Done (Not an Error) • *0x89* - Invalid Op Code • *0x8A* - Timed Out • *0x8B* - Invalid File Name • *0x8C* - TFTP Invalid Timer • *0x8D* - Error Message Received • *0x8E* - Invalid Block Num • *0x8F* - Invalid Session Type • *0x90* - Xmit Errors • *0x91* - File Open Failed • *0x92* - File Write Error ***Note:*** The reason for the failure can also be found at an earlier event in the Event Log.
Failed to add Conn (ID) (connection name) to Map (ID)	The user has added a connection map from ENvision Plus, but failed to add the connection name (ID) to the map (ID).
FATAL: (fatal error #) - (version filename:line #)	The system crashed at startup. A fatal error has occurred (error #) in the indicated (version, filename, line #).
Ffs - Couldn't restore backup: '(filename)'	Flash file system could not restore backup of the indicated (filename).
Ffs - garbage collection completed, count: #	Flash file system garbage collection is complete for (count #).
Ffs - garbage collection started, count: #	Flash file system garbage collection has begun for (count #).

Table 8-4: *DNX-1u List of Events and Descriptions (Continued)*

Event Text	Description
file (name) open failed - ForceSaveAll() failed!!!!!!	The system failed to save all connections to the file system.
File could not be restored from host!	An error has occurred in restoring the database. The file could not be restored from host.
File signature '(signature)' mismatch with current system	An error has occurred in restoring the database backup file because of a file signature (signature) mismatch with the current system.
File System Clean-Up in Progress!! Cannot Load Code!	The file system clean up is in progress and software code cannot be loaded.
FramersMgr - Invalid QuadT1E1Mgr	An error has occurred in startup because of an invalid quad T1E1 framers manager.
FramersMgr - Invalid Slot Number provided	An error has occurred in startup because of an invalid slot number provided for quad T1E1.
FramersMgr - Unable to create redunce Mgr	An error has occurred in setting up APS redundancy.
gateway not found (ip address)	An error has occurred in the network check because the default gateway has not been found (IP address).
HAC T1/E1 - Saving configuration file	The system is saving the HAC T1/E1 configuration file.
HardFault detected on local Protection Port (#)	A hard fault has been detected on the local (protection port #).
HardFault detected on remote Protection Port	A hard fault has been detected on the remote protection port.
hash_Insert() failed on Client identifier insertion	An error has occurred in loading the DHCP configuration during the client identifier insertion.
hash_Insert() failed on insertion of hostname	An error has occurred in loading the DHCP configuration during the insertion of the hostname.
hash_Insert() failed on IP address insertion	An error has occurred in loading DHCP configuration during the IP address insertion.
hash_Insert() failed on Static IP address insertion	An error has occurred in loading the DHCP configuration during the static IP address insertion.
High Speed config file not found for (unit #.slot #)	An error has occurred in loading the high speed configuration file because the file was not found for (unit #.slot #).
hw address already exists, ignoring (MAC address)	An error has occurred in reading the network configuration because the hardware address already exists, ignoring (MAC address).
Incorrect AsyncCfg file version, new file being created	The configuration file is newer than current version. The system is recreating the Asynchronous Serial Port configuration file.
Inform #(message #) to (IP address) TimeOut	An error has occurred in the SNMP trap client session: The Inform message (message #) to (IP address) has timed out.
Input (channel #) Contact Cfg Changed!	The user listed has changed the input (channel #) contact closure configuration.

Table 8-4: *DNX-1u List of Events and Descriptions (Continued)*

Event Text	Description
Input Contact # (contact name) Alarm Deactivated!	The input configured with Alarm Type “None” transitions to its activation level.
Input Contact # (contact name) Alarm OFF!	The user listed has changed the input (contact #) closure (contact name). The alarm is OFF.
Input Contact # (contact name) Alarm Active!	The input configured with Alarm Type “None” transitions to its activation level.
Input Contact # (contact name) Alarm ON!	The user listed has changed the input (contact #) closure (contact name). The alarm is ON.
Invalid byte count: (expected- byte count) (rcv'd- byte count)	An error has occurred in restoring the database backup file because of an invalid byte count. The expected byte count does not match the received byte count.
Invalid File: (filename), found (filename)	An error has occurred in downloading software. Bin file mismatch is found.
Invalid File: Exp- (filename) Rcv- (filename)	The system failed to burn the program to flash. The expected filename does not match the received filename.
Invalid Host Information!	An error has occurred in restoring the database due to invalid host information.
Invalid packet size in XotReceive function	An error has occurred in receiving XOT message due to invalid packet size.
Invalid profile identification on Port (#)	The system failed to get the threshold profile due to an invalid profile identification on (port #).
Key Inactive - (#) Connection Deleted From Map (#)!	The system deleted the connection because of inactive key. The connection has been deleted from the (map #).
Link (#), Loopback off	The user listed has initiated a loopback off at (link #).
LnkThrsPrfMgr loading profile info	The system is loading the threshold profile information.
Load All: Program Download to Unit (#), Slot (#) started.	The system has downloaded software to all. A program download to (unit #), (slot #) has started.
LoadAllRecords - (# of connections) records from (filename) Ver: (#)	The system has finished loading all connections for all ports: (# of connections) records from (filename) (Version #).
LoadAllRecords - Connection file does not exist	An error has occurred in loading the connection for all ports. The connection file does not exist.
Loaded default config for High Speed (unit #.slot #)	The system has loaded the default configuration for high speed (unit #.slot #).
LOGIN user - (user name) (login total: # of login)	A user has just logged in. The system displays the user name and total number of users logged in.
LOGOUT user - (user name) (login remains: # of login)	An user has just logged out. The system displays the user name and total number of users still logged in.

Table 8-4: *DNX-1u List of Events and Descriptions (Continued)*

Event Text	Description
Logport Buffer not found, configuration not set!	An error has occurred in updating the async/terminal server configuration. The configuration is not set.
LSA RTX to rtid (rtid)	OSPF LSA TRACE: Retransmitting to neighbor (rtid).
Manual restore from (port #) to (port #)	Manual restore has occurred from (port #) to (port #).
Manual switchover from (port #) to (port #)	Manual switchover has occurred from (port #) to (port #).
Map (ID) added Conn (connection ID) (connection name)	The user has added a connection map from ENvision Plus. Map (ID) added Conn (connection ID) (connection name).
Map (ID) changed Conn (ID) (connection name)	The user has changed a connection map from ENvision Plus. Map (ID) changed Conn (ID) (connection name).
Map (ID) Connection (ID) changed, (connection name)	The user has changed a connection. Lists map (ID), connection (ID), and (connection name).
Map (ID) Connection (ID) deleted, (connection name)	The user has deleted a connection. Lists map (ID), connection (ID), and (connection name).
Map (ID) Connection added (connection name)	The user has added a connection. Lists map (ID) and (connection name).
Map (ID) Connection changed (connection name)	The user has changed a connection. Lists map ID and (connection name).
Map (ID) Connection (connection ID) added, (connection name)	The user has added a connection. Lists map (ID), connection (ID), and (connection name).
Map (ID) Connection (connection ID) deleted, (connection name)	The user has deleted a connection. Lists map (ID), connection (ID), and (connection name).
Map (ID) Delete Failed!	The system failed to delete map (ID).
Map (ID) deleted Conn (ID) (connection name)	The user has deleted a connection map using ENvision Plus. Lists map (ID), connection (ID), and (connection name).
MapMgr - * Copy of Conn Map (#) to Map (#) failed;ErrorCode = (#)**	An error has occurred while copying a connection map. The copy of connection map (#) to map (#) failed. The error code is (#).
MapsMgr - Activated new connection map (name)	A new connection map (name) has been activated.
MapsMgr - CfgMaps file Reload failed!	The system has failed to reload the connection configuration maps.
MapsMgr - Write Version error	An error has occurred while saving the map configuration because of a failure to write the version.
MapsMgr - XOpenFile error	An error has occurred while saving the map configuration. The system failed to open the file.
max_addr for device (port #) is (address)	The system failed to reload the XOT configuration. The maximum number of addresses that can be configured in the XOT Translation Table is (address).

Table 8-4: *DNX-1u List of Events and Descriptions (Continued)*

Event Text	Description
Memory exhausted, switching over and resetting	Memory has been exhausted. The system is switching over and resetting.
Memory is dangerously low	The memory is dangerously low.
Memory is okay	The memory is okay.
Memory is running low	The memory is low.
MultiConn (tag): Add=(add count) Del=(deleted count) Chg=(change count) Errs=(error count)	The user has issued multiple commands for a connection map change from ENvision Plus. Multi-Connections (tag): (added count, deleted count, change count, and error count).
NBR change, rtid (rtid) ipa (ipaddr) state = (state)	OSPF NEIGHBOR TRACE: Neighbor state with router (rtid), IP address (ipaddr) changed to (state).
NBR DBX I set, rtid (rtid)	OSPF NEIGHBOR TRACE: I bit set in database exchange with router (rtid). Packet ignored.
NBR DBX MS mismatch, rtid (rtid)	OSPF NEIGHBOR TRACE: Master/slave mismatch in database exchange with router (rtid). Packet ignored.
NBR DBX options mismatch, rtid (rtid)	OSPF NEIGHBOR TRACE: Options mismatch in database exchange with router (rtid). Packet ignored.
NBR seqmismatch event,case else, rtid (rtid)	OSPF OSPF NEIGHBOR TRACE: Sequence number (seq) mismatch occurred in database exchange with router (rtid). Packet ignored.
NetID(ID #) exists, deleting Conn(Connection ID), (connection name)	Request from ENvision NetID (ID #) exists to delete connection (Connection ID, connection name).
Network already exists, ignoring (host name)	An error has occurred in reading the network configuration. The network already exists, ignoring (host name).
Network already exists, ignoring (network name)	An error has occurred in reading network configuration. The network already exists, ignoring (network name).
no dynamic addresses available, ignoring	A DHCP error has occurred. There are no dynamic addresses available, ignoring DHCP request.
No validation, header version: (#)	An error has occurred in restoring the database backup file. There is no validation, header version: (#).
nstbtmgr: Copy Bts failed - Can't find connection (cid=#)	The system failed to copy the connection map because it cannot locate the connection.
ospfAddRoute before Route Table exists!	Internal OSPF error. Attempting to add to the routing table before it is allocated.
ospfAddRoute no circuit, no route!	Internal OSPF error. Attempting to find routing information for a circuit that is not in the routing table.
OSPF ERROR! (filename):(line) (message)	Generic OSPF internal error. Indicates the source file name, line and error message.
Output (channel #) Contact Cfg Changed!	The user listed has changed the output (channel #) contact closure configuration.

Table 8-4: *DNX-1u List of Events and Descriptions (Continued)*

Event Text	Description
Output Contact # (contact name) Alarm Off!	Output Contact Closure # (contact name) is out of alarm. This event is displayed for Output Contacts configured with Alarm Activations of Critical, Major, or Minor.
Output Contact # (contact name) Alarm Deactivated!	Output Contact Closure # (contact name) is out of alarm. This event is displayed for Output Contacts configured with Alarm Activation of Deactivate.
Output Contact # (contact name) Alarm Activated!	Output Contact Closure # (contact name) is in alarm. ***Note:*** *Output Contacts configured with Alarm Activations of Critical, Major, or Minor will continue to generate the original "Alarm On!" events.*
Output Contact # (contact name) Alarm Activated!	Output Contact Closure # (contact name) is out of alarm. This event is displayed for Output Contacts configured with Alarm Activation of Activate.
P1.(Slot #.Channel #.Name) Exceeded Hard Fault Threshold	Port (#) has exceeded the hard fault threshold.
P1.(Slot#.Channel #.Name) Exceeded Soft Fault Threshold	Port (#) has exceeded the soft fault threshold.
Port (#) - Switchover Unsuccessful	The APS switchover to port (#) was unsuccessful.
Port (#) - Switchover Unsuccessful: chk remote status	The APS switchover to port (#) was unsuccessful. Check the remote status.
P1.(Slot#.Channel #.Name) is Down due to (Link APS state)$	The port (#) (link name) is down.
P1.(Slot#.Channel #.Name) is Up	The port (#) (link name) is up.
Port (#) carrier dropped due to link failure	Port (#) carrier dropped due to link failure.
Port (#) carrier restored	Port (#) carrier has been restored.
Port (#) cleared G.826 counters	Port (#) G.826 statistics for the indicated port were reset to 0.
Port (#) cleared all counters	Port (#) primary T1/E1 statistics and T1/CSU statistics were reset to 0.
Port (#) cleared APS counters	Port (#) APS statistics for the indicated port were reset to 0.
Port (#) cleared T1/CSU counters	Port (#) T1/CSU statistics for the indicated port were reset to 0.
Port (#) FDL - Payload Loop Cmd Ignored	The user listed has initiated a payload loop. However, since the network loop is disabled at configuration, the payload loop command was ignored for port (#).
Port (Channel # (Name)) has an unknown link condition	Port (#) has an unknown link condition.
Port (#) In LOS	Port (#) is in a Loss of Signal state.
Port (#) Out of LOS	Port (#) is out of a Loss of Signal state.

Table 8-4: *DNX-1u List of Events and Descriptions (Continued)*

Event Text	Description
Port (#) is Offline	Port (#) is offline.
Port (#) is Online	Port (#) is online.
Port (#) Local Loop Off	The user listed has turned off a local loopback at port (#).
Port (#) Local Loop On	The user listed has initiated a local loopback at port (#).
Port (#) manual switch successful	Port (#) APS manual switch was successful.
Port (#) Remote Loop Is Down	Port (#) remote loop is down.
Port (#) Remote Loop Is Up	Port (#) remote loop is up.
Port (#) remote request switch successful	Port (#) APS remote request switch was successful.
Port (#) switched to Offline	Port (#) switched to offline.
Port (#) switched to Online	Port (#) switched to online.
Port (#) V54 Loop Down (-->Network)	The user listed has initiated a V54 loop down command towards the network at port (#).
Port (#) V54 Loop Down Detected - Local Loop Off	A V54 loop down has been detected at port (#) and the local loop is off.
Port (#) V54 Loop Up (-->Network)	The user listed has initiated a V54 loop up command towards the network at port (#).
Port (#) V54 Loop Up Detected - Local Loop On	A V54 loop up has been detected at port (#) and the local loop is on.
Port (#) V54 Remote Loop Up Request Failed	A V54 remote loop up at port (#) request has failed.
Port (#), activated Remote Line Loop Request	The user listed has activated a remote line loop request at port (#).
Port (#), activated User Defined Remote Line Loop	The user listed has activated user-defined remote line loop at port (#).
Port (#), cleared all counters	The user listed has cleared all counters at port (#).
Port (#), inserted Single Bit	The user listed has inserted single bit error at port (#).
Port (#), Invalid Loopback requested	The user listed has requested an invalid loopback at port (#).
Port (#), Line Loopback on	The user listed has initiated a line loopback at port (#).
Port (#), Local Loopback on	The user listed has initiated a local loopback at port (#).
Port (#), Payload Loopback on	The user listed has initiated a payload loopback at port (#).
Port (#), reset and re-configured framer	The user listed has initiated a re-initialize framer command at port (#).
Port (#), turned Backplane Loop off	The user listed has turned off a backplane loop at port (#).
Port (#), turned Backplane Loop on	The user listed has initiated a backplane loop at port (#).
Port (#), turned Bert off	The user listed has initiated a BERT off command at port (#).
Port (#), turned Bert on	The user listed has initiated a BERT on command at port (#).

Table 8-4: *DNX-1u List of Events and Descriptions (Continued)*

Event Text	Description
Port (#): Deactivate Network Loop Code detected	A deactivate network loop code command has been detected at port (#).
Port (#): Far End Sending AIS	The far end is sending an alarm indication signal (AIS) on port (#)
Port (#): FarEnd ForceSwitch to Protection complete.	The APS Switching Mode is set to forced protection online. The far end (the remote side that received a switching command) was forced to switch to the protection link.
Port (#): FarEnd ForceSwitch to Working complete.	The APS Switching Mode is set to forced working online. The far end (the remote side that received a switching command) was forced to switch to the working link.
Port (#): FDL - Loop Off Cmd Rcv'd	An FDL loop off command was received on port (#).
Port (#): FDL - Payload Loop Cmd Rcv'd	An FDL payload loop command was received on port (#).
P1.(Slot #.Channel #) FDL Error	An FDL error has occurred on port (#).
Port (#): In Red Alarm	Port (#) has a red alarm.
Port (#): NearEnd ForceSwitch to Protection complete.	The APS Switching Mode is set to forced protection online. The near end (local side that initiated a switching command) was forced to switch to the protection link.
Port (#): NearEnd ForceSwitch to Working complete.	The APS Switching Mode is set to forced working online. The near end (local side that initiated a switching command) was forced to switch to the working link.
Port (#): Out of AIS	Port (#) no longer has an alarm indication signal (AIS).
Port (#): Out of Red Alarm	Port (#) no longer has a red alarm.
Port (#): Out of Yellow/RAI	Port (#) is no longer has a yellow alarm/remote alarm indication (RAI).
Port (#): Yellow/RAI	Port (#) has a yellow alarm/remote alarm indication (RAI).
Port (Unit #.Slot #.Port #) configuration changed	The user listed has changed the port (unit #.slot #.port #) configuration.
PPP keep-alive timeout (transmit unit)	The PPP session timed out due to lack of keep-alive messages on the transmit unit.
ProcDDP nbr (rtid) seq (seq) is master	OSPF NEIGHBOR TRACE: Processing database descriptor from neighbor (rtid). Sequence number is (seq). Neighbor is master.
ProcDDP nbr (rtid) seq (seq) is slave	OSPF NEIGHBOR TRACE: Processing database descriptor from neighbor (rtid). Sequence number is (seq). Neighbor is slave.
Profile being defaulted: (filename)	The unit profile being defaulted (filename).
Profile file arrived alert at Node	The node has received an alert saying a new profile file has arrived.
Program Download Ended	The program download has ended.
Program Download to Boot Loader started.	The program download to boot loader has started.
Program Download to flash.	The current program is downloading to flash memory.

Table 8-4: *DNX-1u List of Events and Descriptions (Continued)*

Event Text	Description
Program Download to Unit (#), Slot (#) completed	The program download to unit (#), slot (#) is complete.
Protection P1.(Slot#.Channel #.Name) is Down due to (Link APS state)$	Protection port (#) (link name) is down.
Protection P1.(Slot#.Channel #.Name) is Up	Protection port (#) (link name) is up.
Protection P1.(Slot#.Channel #.Name) has an unknown link condition	Protection port (#) has an unknown link condition.
Protection port (#) switched to Offline	Protection port (#) has switched to offline.
Protection P1.(Slot#.Channel #.Name) switched to Online	Protection port (#) has switched to online.
Protection P1.(Slot#.Channel #.Name) switched to Standby	Protection port (#) has switched to standby.
Queue Delayed Ack lsaid (linkid) lsartid (rtid) nbr (rtid)	OSPF LSA TRACE: Delayed ACK is being queued for LSA with link ID (linkid), with advertising router ID (rtid) to neighbor (rtid).
Read error in XotReceive function: nread < 0	An error has occurred in receiving the XOT message. The message is empty.
Read file - (filename) - from SMC failed; Card Resetting...	The system failed in reading the file from SMC. The card is resetting.
ReadRecord - Invalid version number: (#)	An error has occurred in the reading connection due to an invalid version number (#).
Rebuild Connection Map # (map ID); (# of connection) Good, (# of connection) Errored	During startup an error has occurred in the rebuild connection map # (map ID); (# of good connection, # of errored connection).
Received Invalid AckConfirm from (IP address)	An error has occurred in network management. An invalid AckConfirm was received from (IP address).
Received unexpected AckConfirm from (IP address)	An error has occurred in network management. The DNX-1u network management is disabled. An unexpected AckConfirm was received from (IP address).
Redun Faults Configuration Modified!	The system is configuring the protection group thresholds. Redundancy faults configuration has been modified!
Reject (IP Addr):(TCP Port) <- (IP Addr): (TCP Port) (TCB Status	TCP Stack is rejecting a connection to the same port as existing connection
Reload default config for High Speed (unit #. slot #)	The system has reloaded the default configuration for high speed (unit #.slot #).
ReloadCfg could not open (filename)	The system failed to reload the unit profile configuration because (filename) could not be opened.
ReloadCfg reading file (filename)	The system is reloading the unit profile configuration and reading the file (filename).
ReLoaded (filename)	The system has reloaded the octal high-speed configuration file.

Table 8-4: *DNX-1u List of Events and Descriptions (Continued)*

Event Text	Description
Rfs - '(filename)' is corrupted in flash	The system failed to copy a file from flash to RAM during startup. The (filename) was corrupted in flash.
Rfs - '(filename)', file not readable.	An error has occurred in the RAM file system. The (filename) is not readable.
Rfs - '(filename)', file not writable.	An error has occurred in the RAM file system. The (filename) is not writable.
Rfs - CopyFail: '(destination name)' is not accessible	The system failed to copy the source file to the destination file. The destination file is not accessible.
Rfs - CopyFail: '(destination name)', mismatch checksum	The system failed to copy the source file to the destination file because of a mismatched checksum.
Rfs - CopyFail: '(filename)', mismatch checksum	An error has occurred in copying other image database to the current image database because of a mismatched checksum.
Rfs - Corrupted flash image for: '(filename)'	An error has occurred in the RAM file system because of a corrupted flash image for (filename).
Rx Ack lsaid (linkid) lsartid (rtid) nbr (rtid)	OSPF LSA TRACE: Received ACK for LSA with link ID (linkid), with advertising router ID (rtid) from neighbor (rtid).
SaveRecord - Error - connection file Open failed	An error has occurred in saving the connection. The system failed to open the connection file.
SaveRecord - failed to save connection -(name)- to flash	An error has occurred in saving the connection. The system failed to write connection (name) to flash.
Saving High Speed configuration file	The system is saving the high-speed configuration file.
sending ddpkt: (rtid) seq (sequence)	OSPF NEIGHBOR TRACE: Sending database packet to router (rtid) with sequence number (seq).
Sending Delayed Ack	OSPF LSA TRACE: Delayed ACK is being sent.
Send Direct Ack lsaid (linkid) lsartid (rtid) nbr (rtid)	OSPF LSA TRACE: Immediate ACK is being sent for LSA with link ID (linkid), with advertising router ID (rtid) to neighbor (rtid).
Set unit nbr (base 0) from (unit #) to (#)	The system is setting the unit number (base 0) from (unit #) to (#).
Slot (#) not responding	The slot (#) not responding.
Slot (#) reported Off the Backplane.	One of the T1/E1 modules has been disconnected from the backplane.
SNMP Agent File does not exist! Using Default Parameters!	The system failed to read the SNMP configuration. The SNMP agent file does not exist. Default parameters are being used.
SNMP Authentication Failure from (community)	SNMP community configured does not match network management station.
SNMP BootImage Load Failed: No Image File	SNMP failed to load the boot image file because no image file exists.
SNMP BootImage Load Failed: State=(state #), Type=(device type)	SNMP failed to load the boot image file.

Table 8-4: *DNX-1u List of Events and Descriptions (Continued)*

Event Text	Description
SNMP Input PDU Too Large, Discarded!	SNMP input protocol data is too large and, therefore, SNMP request has not been processed.
SNMP SysImage Load Failed: No Image File	SNMP failed to load the system image file because no image file exists.
SNMP SysImage Load Failed: State=(state #), Type=(device type)	SNMP failed to load the system image file.
Software downloaded does not match hardware	The software that was downloaded must match the required hardware in order to proceed with the download.
Start converting bts file (filename)!	The user must start converting the backplane timeslot file (filename).
Subsystem 1.(subsystem) reporting	Subsystem initialization has started. Possible subsystems are T1E1-A, T1E1-B, ROUTER, SYNC, ASYN, CONT, VOLT, TCODER, PS-A, PS-B and TEMP.
Supply Present	The power supply is present.
Sync Port n 2047 Pattern BERT Off	A 2047 BERT pattern is turned off for port (#).
Sync Port (#) 2047 Pattern BERT On	A 2047 BERT pattern is turned on for port (#).
Sync Port n All Ones Pattern BERT Off	An All Ones BERT pattern is turned off for port (#).
Sync Port (#) All Ones Pattern BERT On	An All Ones BERT pattern is turned on for port (#).
Sync Port n All Zeros Pattern BERT Off	An All Zeros BERT pattern is turned off for port (#).
Sync Port (#) All Zeros Pattern BERT On	An All Zeros BERT pattern is turned on for port (#).
System: Cleared all error counters	The system has cleared all error counters.
System flash did not program properly.	An error has occurred in loading the code. The system flash did not program properly.
System Image 1 reports checksum error	A checksum error has occurred on system image 1.
System Image 2 reports checksum error	A checksum error has occurred on system image 2.
System Image 1 reports checksum error	The system image has switched over during boot.
T1/E1 - Saving configuration file	The system is saving the T1/E1 configuration file.
T1/E1, cleared all error counters	The user listed has cleared all T1/E1 error counters.
TACACSP: (n): (data)	TACACS Plus packet dump where (n) is the number of data bytes and (data) is the actual ASCII data with non-printable characters displayed as “.”.
TACACSP: accounting failed!	TACACS Plus accounting transaction failed.
TACACSP: authentication failed!	TACACS Plus failed to validate username/password.
TACACSP: authorization failed!	TACACS Plus failed to assign rights to user.
Telnet Manager Active. Max Sessions=(# of sessions)	The Telnet manager is active. The maximum number of sessions is (# of sessions).

Table 8-4: *DNX-1u List of Events and Descriptions (Continued)*

Event Text	Description
Telnet Manager no available sessions for request.	No Telnet sessions are available for request.
Telnet not available, maximum sessions are active.	Telnet is not available because the maximum number of sessions are active.
Telnet: close server session (session) (pid)	Telnet server session (session) with (pid) closed.
Telnet: open server session (session) ((pid1):(pid2):(pid3))	Telnet server session (session) with these (pid)'s opened.
Telnet: close session (session #)	Telnet is closing the session (session #).
Telnet: open session (session #)	Telnet is opening the session (session #).
Telnet: terminated session (session #)	Telnet is terminating the session (session #).
TempSens - Temperature out of range: (current temperature) C	An error has occurred in the temperature sensor because the (current) temperature is out of range.
Terminal server failed an accept session (session#)	The terminal server has failed an accept session for the session (session #).
Terminal server failed a socket listen, session: (instance #)	The terminal server has failed a socket listen for the session (instance #).
Terminal server failed to create a socket, session: (instance #)	The terminal server has failed to create a socket for the session (instance #).
Terminal server time out, session: (instance #)	The terminal server has timed out for the session (instance #).
Terminal server user connected, session: (instance #)	The terminal server user is connected for the session (instance #).
Test Access Configuration Not Found!	Test access configuration file not found on disk. Default created.
TFTP Client - Can't open a tftp semaphore	The TFTP client cannot open a tftp semaphore.
TFTP Client - Unable to create task	The TFTP client is unable to create a task.
TFTP Error - invalid ack; bad Ack R-(block #) Expected-(last block transmitted)	A TFTP error has occurred due to invalid acknowledge; bad Acknowledge Request (block #) versus Expected (last block transmitted).
TFTP Error - invalid session type	A TFTP error has occurred due to an invalid session type.
TFTP timeout to (IP address), (filename)	A TFTP error has occurred due to timeout to (IP address), (filename).
TFTPSES: Abort Program Load - device program load in progress	A TFTP session request has been aborted because a device program load is already in progress.
TFTPSES: File failed on WriteFile; (filename, files size)	A TFTP session has failed to write the file to flash (filename, files size).
TFTPSES: Invalid File Rcv'd; (filename), (file size)	A TFTP session error has occurred because an invalid file was received from (filename), (file size).

Table 8-4: *DNX-1u List of Events and Descriptions (Continued)*

Event Text	Description
TFTPSES: Invalid File; from (IP address), (filename)	A TFTP session error has occurred because of an invalid file from (IP address), (filename).
TFTPSES: Prog File Rcv'd; (filename), (file size) bytes	TFTP session has received a program file for download (filename), (file size) bytes.
The Prf (profile name) changed	The user listed has changed the Link APS Threshold Profile (profile name) configuration.
TimerDel: Timer not stopped (name, instance)	The system has failed to delete a timer. The timer has not stopped (name, instance).
TL1 - (user name) Logged In!	TL1 (user name) is logged in.
TL1 - (user name) Logged Out!	TL1 (user name) is logged out.
Transcoder Configuration Not Found!	The system has failed to load the transcoder configuration because the file was not found.
Transcoder File Open Error!	An error has occurred in saving the transcoder configuration because the file failed to open.
Tried to assign an ip which already had a binding (ip address)	The system tried to assign an IP that already had a binding (IP address).
Trying to load older software version, flash was not loaded.	An error has occurred in loading code because the system was trying to load older software version and flash was not loaded.
Unable to allocate hash tables.	An error has occurred in initializing DHCP. The system failed to create hash tables.
Unable to link Network to cable hash, ignoring (network name)	An error has occurred in reading the network configuration. The system is unable to link the network to cable hash, ignoring (network name).
Unit (unit #) not present.	The unit (unit #) is not present.
Unit Name (System ID) has changed	The unit name (system ID) has changed.
Unknown function on port (#)	An unknown link APS function is on port (#).
Unknown UDPmsg from (IP address) on Port (#)!	An error has occurred in network management. The system failed to validate the routing manager IP address. There is an unknown UDP message from (IP address) on port (#).
Unsupported header version: (#)	An error has occurred in restoring the database backup file due to an unsupported header version (#).
UPDATE LSA: id (linkid) rtid (rtid) area (areaid) type (lsatype)	OSPF LSA TRACE: Updating LSA with link ID (linkid), router ID (rtid), area ID (areaid), and LSA type (lsatype) in LSA database.
Upgrade file (filename) from Rev (#) to Rev (current version)	The connection file version does not match. The file (filename) needs to be upgraded from Rev (#) to Rev (current version).
Uploading backup file to host # at location (file path)	The system is uploading the database backup file to host (#) at location (file path).

Table 8-4: *DNX-1u List of Events and Descriptions (Continued)*

Event Text	Description
UserID - Read error - Invalid field entries	An error has occurred in loading the user's profile due to invalid field entries.
UserID - validation error - identifier is missing	An error has occurred in loading the user's profile because an audit trail identifier is missing.
UserID - validation error - invalid identifier	An error has occurred in loading the user's profile because of an invalid audit trail identifier.
UserID - validation error - invalid level	An error has occurred in loading user's profile because of an invalid security level.
UserID - validation error - invalid name or password	An error has occurred in loading user's profile because of an invalid name or password.
UserID - validation error - name or password is missing	An error has occurred in loading user's profile because the name or password is missing.
UserID - Write user id error	An error has occurred in saving the user's profile.
UserMgr - Can't allocate user profile object	An error has occurred in loading the user's profile because the user profile object cannot be allocated.
UserMgr - Can't read the released version	An error has occurred in loading user's profile due to a missing version number. The user's file is deleted.
UserMgr - error opening file to write	An error has occurred in saving the user's profile. The user's file has not been saved.
UserMgr - Invalid user version - file deleted	An error has occurred in loading the user's profile because of an invalid user version. The user's file is deleted.
UserMgr - Read file error - file renamed	An error has occurred in loading user's profile because invalid entries or too many user's records are found. The file is renamed.
UserMgr - Read from older user file version - (version #)	An error has occurred in loading the user's profile because of an incompatible user's profile version (version #).
UserMgr - Save file error - file deleted	An error has occurred in saving the user's profile. The user's file is deleted.
UserMgr - user file does not exist	An error has occurred in loading the user's profile because the user's file does not exist.
UserMgr - Write version error	An error has occurred in saving user's profile. The user's file is deleted.
UserMgr, add user - (user name)	The user listed has added a user to the user's profile (user name).
UserMgr, changed user - (user name)	The user listed has changed a user at the user's profile (user name).
UserMgr, delete user - (user name)	The user listed has deleted a user from the user's profile (user name).
Voltage Measure (ID) Alarm ON!	An error has occurred at the voltage measure port (ID). The alarm has been activated.

Table 8-4: *DNX-1u List of Events and Descriptions (Continued)*

Event Text	Description
Voltage Measurement (port #) Cfg Changed!	The user listed has changed the voltage measurement configuration at port (#).
WAN port (#) is not up, calling address (address)	XOT error: The WAN port (#) is not up. The calling address is (address).
Working P1.(Slot#.Channel #.Name) is Down due to (Link APS state	The working port (#) (link name) is down.
Working P1.(Slot#.Channel #.Name) is Up	The working port (#) (link name) is up.
Working P1.(Slot#.Channel #.Name) failed to switchover	The working port (#) failed to switch over.
Working P1.(Slot#.Channel #.Name) has an unknown operation state	The working port (#) has an unknown operation state.
Working P1.(Slot#.Channel #.Name) switched to Offline	The working port (#) has switched to offline.
Working P1.(Slot#.Channel #.Name) switched to Online	The working port (#) has switched to online.
Working P1.(Slot#.Channel #.Name) switched to Standby	The working port (#) has switched to standby.
Working port (#), has an unknown link condition	The working port (#) has an unknown link condition.
WriteRecord - Invalid version number: (#)	An error has occurred in saving the connection because of an invalid version number (#).
WriteRecord Error - XFilePutRecord failure	An error has occurred in saving the connection because the system failed to put the file to record.
XOTDRV: XOTIN process already exists for LCN (#)	The system failed to find the XOT connection for an outbound packet. The XOTIN process already exists for LCN (#).
Events Beginning With A Variable	
(Deleted count) ConnX deleted from Map (ID) for (Unit #.Slot #)	The user listed has deleted (#) of connections from map (ID) for (unit #.slot #).
(Deleted count) ConnX deleted from Map (ID) for Subrate.	The user listed has deleted a subrate switch connection
(Filename)Cfg file not found, using defaults	An error has occurred in loading the SNMP trap client configuration because the configuration file was not found. The defaults are being used.
(manager_ip) rcv'd Eplus Reconcile	First EPlus reconciliation message received from network manager after online.
(Name) configuration saved	The named configuration has been saved.
(Name) Key Activated!	The named feature key has been activated.
(Name) Key Deleted!	Service is required. The named feature key is deleted.

Table 8-4: *DNX-1u List of Events and Descriptions (Continued)*

Event Text	Description
(Name) Key Inactivated!	The named feature key has been inactivated.
(Network name) rcv'd Eplus Reconcile	(Network name) has received the ENvision Plus command to reconcile the databases.
(Network name) ready for Eplus Reconcile	(Network name) is ready for ENvision Plus to reconcile the databases.
(slot text) present	(Slot text) is now present.
(User name) changed privilege to (security level)	(User name) changed privilege to (security level).

THIS PAGE INTENTIONALLY LEFT BLANK.

Section 9
Utilities

Introduction

The Utilities Menu provides access to several submenus from which you can run Router Commands, access the Database Menu, perform system resets, download software, manage firmware, close Telnet sessions, and check serial numbers and part ID. The Utilities Menu and its submenu structure is illustrated in Figure 9-1.

Figure 9-1: *Utilities Menu Structure*

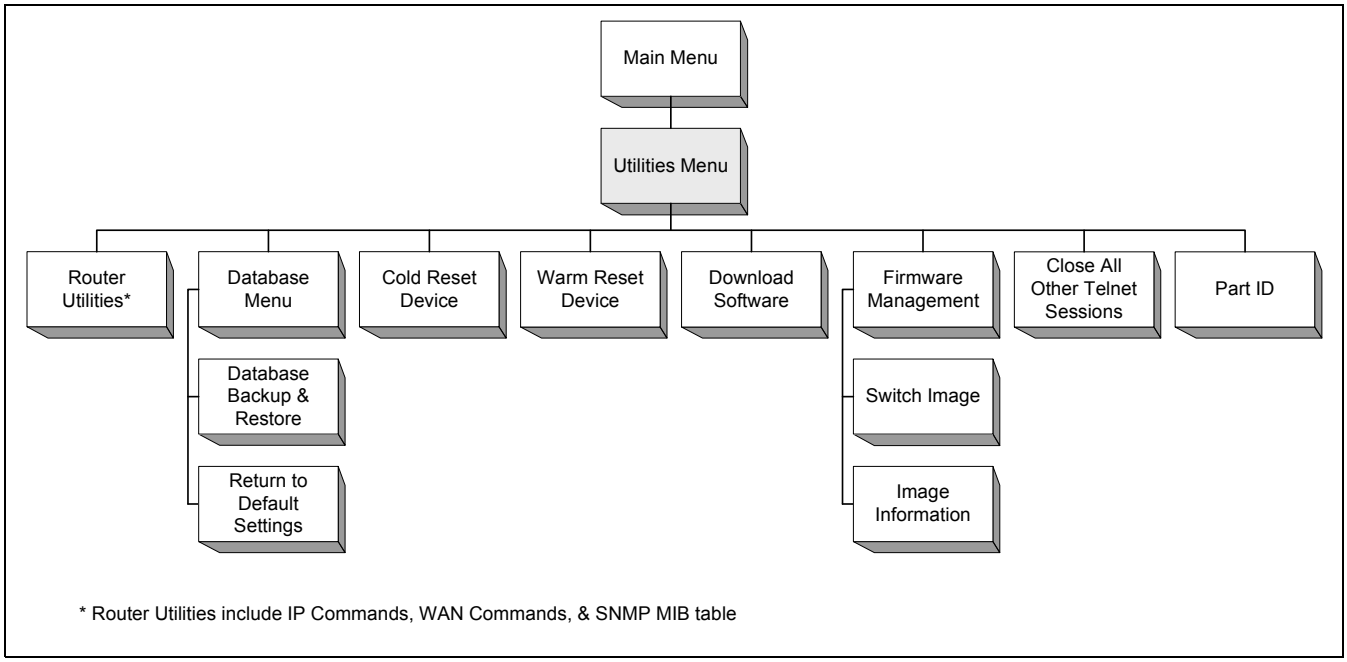

Utilities Menu

The Utilities menu allows you to obtain information on various DNX-1u components as well as perform software downloads and resets.

Navigation:
DNX-1u Main Menu ↓ Utilities

Accessing Utility Information

1. From the DNX-1u Main Menu, click on **Utilities**.

   The Utilities Menu is displayed.

Figure 9-2: *Utilities Menu*

```
System ID: DNX-1u No. 1                                          Help = [?]
Sycamore Networks, Inc.              DNX-1u

                                 Utilities Menu

                            Router
                            Database
                            Cold Reset Device
                            Warm Reset Device
                            Download Software
                            Firmware Management
                            Close All Other Telnet Sessions
                            Part ID
```

From this screen you can access several submenus to run Router Commands, access the Database Menu, perform system resets, download software, manage firmware, close Telnet sessions, and check serial numbers and part ID. Refer to the following sections for more information.

Router

The utilities that are available for the Router Subsystem are designed to allow the user to view Router statistics or to aid in the debugging process. The Router Utilities Menu provides access to these utilities.

Navigation:
DNX-1u Main Menu ↓ Utilities ↓ Router

Accessing Router Utilities

To access Router utilities, follow the procedure below.

1. From the Utilities Menu select **Router**.

   The Router Utilities screen is displayed.

Figure 9-3: *Router Utilities Menu*

```
System ID: DNX-1u No. 1                                          Help = [?]
Sycamore Networks, Inc.              DNX-1u

                                 Router Utilities


IP commands:             WAN commands:                SNMP:
 Ping                     LAN and WAN status           MIB table
 Telnet Client            Logical port status
 IP route table           Frame relay status
 ARP table                Frame relay DLCI
 Trace IP                 PPP status
                          LAPB status
                          XOT status
```

2. This screen is divided into *three* groups of functions:
   - IP Commands
   - WAN Commands
   - SNMP Commands
3. Refer to the sections below for additional information.

IP Commands

There are *five* utilities associated with the IP commands:

- Ping
- Telnet Client
- IP Route Table
- ARP Table
- Trace IP

Using the Ping Utility

PING stands for ***P**acket **In**ternet **G**roper* as defined in RFC 1392. This utility enables the user to check for connectivity to ensure that an IP address is reachable. The utility accomplishes this by sending a datagram to the remote system's IP address and waiting for a response.

To access the Ping utility, follow the procedure below.

1. From the Router Utilities Menu screen select **Ping**.

   The Ping Menu is displayed.

Figure 9-4: *Ping Menu*

```
System ID: DNX-1u No. 1                                          Help = [?]
Sycamore Networks, Inc.              DNX-1u
                                   Ping Menu

                        Ping Setup
                        ----------
                        Node IP address....: 0.0.0.0
                        Ping count.........: 1
                        Number of bytes....: 64
                        Status.............: Inactive

                        Ping Statistics
                        ---------------
                        Pings sent.........: 0
                        Pings received.....: 0
                        Bytes received.....: 0
                        Roundtrip delay(ms): 0
                        Percent loss.......: 0.0 %




[S]tart/Stop Pinging  [C]lear Statistics
```

2. Move your cursor to the Node IP address field and press **Enter**. Type in the destination IP address that you want to PING. The address is entered in "dotted decimal notation." Press **Enter** to store.

3. To enter a ping count (the number of times to ping the defined address), move your cursor to the *Ping Count* field and press **Enter** until the specified pre-defined count is displayed. The pre-defined counts are 1, 100, 100, 1000, and Continuous.

Note: *The default count (no entry) is 1.*

4. To enter the size (in bytes) of the ping message you plan to send, move your cursor to the Number of bytes field and press **Enter** until the specified pre-defined length is displayed. The pre-defined lengths are 10, 64, 100, and 1000.

Note: *The default length is 64 bytes.*

5. After you enter the destination address, and optional count and length, press **S**.
6. The remote unit should respond, and ping statistics is displayed with the number of pings sent, pings received, and bytes received (echoed back) from the IP address, as well as the Roundtrip Delay (length of time in milliseconds) that it took for the echo request message to be sent to the IP address and the echo reply message to be returned to the router. The screen will also display a loss percentage. If the count is 0, the trip was accomplished in less than 10 ms.

Figure 9-5: *Sample Ping Response*

```
System ID: DNX-1u No. 1                                          Help = [?]
Sycamore Networks, Inc.              DNX-1u
                                   Ping Menu

                        Ping Setup
                        ----------
                        Node IP address....: 192.168.230.246
                        Ping count.........: 1
                        Number of bytes....: 64
                        Status.............: Inactive

                        Ping Statistics
                        ---------------
                        Pings sent.........: 1
                        Pings received.....: 1
                        Bytes received.....: 64
                        Roundtrip delay(ms): 65526
                        Percent loss.......: 0.0 %




[S]tart/Stop Pinging  [C]lear Statistics
```

Note: *To stay on this screen for more than 10 minutes, periodically press the* ***Space Bar*** *or any other key on the keyboard. Otherwise, the DNX-1u automatically terminates your session (performs a log off).*

7. Press **S** again to stop Ping, then press **X** or the **Esc** key twice to return to the previous menu.
8. If an invalid address is entered or the remote unit is not responding, the *Pings received*, *Bytes received*, and *Roundtrip delay(ms)* fields all display *0*, and the *Percent loss* field displays *100%*.

Field Descriptions

Table 9-1 lists the field descriptions for the Ping Menu.

Table 9-1: *Ping Menu Field Descriptions*

Field	Description
Ping Setup	
Node IP Address: *(text field)*	Specifies the IP address you want to Ping. Enter the address in dotted decimal notation. The default is *0.0.0.0.*
Ping Count: *(option field)*	Specifies the number of times you want to ping the defined address, either *1*, *10*, *100*, *1000* or *Continuous.* The default is *1*.
Number of Bytes: *(option field)*	Indicates the length (in bytes) of the ping message you plan to send. This is used to verify the receiving end can receive a packet of the defined size. The values are *10*, *64*, *100* or *1000.* The default is *64*.
Status: *(display field)*	Displays *Active* if pinging is taking place, and *Inactive* if it is not.
Ping Statistics	
Pings sent: *(display field)*	Displays the number of pings sent to the remote IP address.
Pings received: *(display field)*	Displays the number of returns received from the remote IP address.
Bytes received: *(display field)*	Displays the number of bytes received from the remote IP address.
Roundtrip delay(ms): *(display field)*	Displays the amount of time, measured in milliseconds to receive a response from the remote IP address. If the Roundtrip Delay is *0*, the trip was accomplished in less than 10 ms.
Percent loss: *(display field)*	Indicates the percentage loss, based on the number of pings that did not receive a response. A loss percentage above 0% indicates a possible problem with the route.

Using the Telnet Client Utility

Based on the client-server model, Telnet provides a local client that contacts a remote server. The Telnet protocol creates a simple Network Virtual Terminal (NVT) that makes all hosts display as if they employ exactly the same techniques for presenting information to the screen and exactly the same commands for performing operations. The terminal displays one line at a time.

Note: *The default timeout for a Telnet session is 10 minutes.*

To access the Telnet Client utility, follow the procedure below.

1. From the Router Utilities Menu screen select **Telnet Client**.

   You are prompted to enter the destination IP address.

Figure 9-6: *Telnet Client - Enter IP Address*

```
Enter destination IP address:
```

2. Enter a destination IP address.

Note: *Do not press **Enter** first as in other DNX-1u text fields; begin by typing in the IP address first, then press **Enter** when finished.*

For example, enter 192.168.230.246 and press **Enter**.

3. Once you press **Enter**, Telnet displays a message indicating the status of this request.

4. If Telnet successfully connects to the host you specified, you are asked to login to the remote system. From that point on, you can follow the prompts and screens of the remote system.

Figure 9-7: *Telnet Menu (Connected)*

```
Enter destination IP address: 192.168.230.246
Attempting connection to host 192.168.230.246...
Connected to host 192.168.230.246.
Press <Ctrl-C> to terminate connection to remote host.
login:
```

5. You are connected to the remote unit and can follow the remote unit's menu system.

6. When complete, press **Ctrl C** to terminate the connection to the remote host and return to the DNX-1u menu system.

Note: *If Telnet does not successfully connect to the host, an error message is displayed.*

Figure 9-8: *Telnet Menu (Not able to Connect)*

```
Enter destination IP address: 192.168.230.248
Attempting connection to host 192.168.230.248...
%TELNET ERROR - could not connect to destination!
Press any key to continue...
```

Using the IP Route Table Utility

From the IP Route Table Menu, you can select either Show IP Route or Dump IP Route Table. Show IP Route shows a specific route for an individual destination. Dump IP Route Table shows a listing of every destination address and the route that each takes.

To access the IP Route Table utility, follow the procedure below.

1. From the Router Utilities Menu screen select **IP Route Table**.

   The IP Route Table Menu is displayed.

Figure 9-9: *IP Route Table Menu*

```
System ID: DNX-1u No. 1                                          Help = [?]
Sycamore Networks, Inc.              DNX-1u

                              IP Route Table Menu



                              Show IP Route
                              Dump IP Route Table
```

Showing an IP Route

1. To display the route from the Router to a specific destination network IP address or a specific host address select **Show IP Route**.

   The Show IP Route Menu is displayed.

Figure 9-10: *Show IP Route Menu*

```
System ID: DNX-1u No. 1                                          Help = [?]
Sycamore Networks, Inc.              DNX-1u

                              Show IP Route Menu

Requested route.: 10.100.1.135
Route...........: 10.100.1.0           Port............:WAN1/PPP
Mask............: 255.255.255.0        Metric..........: 75
Next hop........: 196.0.1.11           TimeToLive......:Forever
```

2. Move your cursor to the *Requested Route* field, press **Enter**.
3. Enter the specific destination network address or a specific host address for IP route you want displayed and press **Enter**.

   The IP Route information is displayed.

Field Descriptions

Table 9-2 lists the field descriptions for the Show IP Route Table Menu

Table 9-2: *Show IP Route Field Descriptions*

Field	Description
Requested route: *(text field)*	Specifies the request routing information for a specific destination network address or a specific host address. Enter the requested route address in dotted decimal notation.
Route: *(text field)*	Specifies the destination network address or a specific host address. It is represented in “dotted decimal notation.” Each field represents 8 bits of the address. The range of each field is from *0-255*.
Mask: *(text field)*	This address is generated automatically and is represented in “dotted decimal notation.”
Next Hop: *(text field)*	Specifies the IP address to which an IP frame is to be forwarded. The next hop is represented in “dotted decimal notation.” ***Note:*** *This field specifies **direct** if there is a direct connection to a device.*

Table 9-2: *Show IP Route Field Descriptions*

Field	Description
Port: *(text field)*	Identifies the port from which the datagram is sent, either *WAN1/n*, *WAN/PPP*, *WAN/PPPM*, *WAN/XOT* and *INTERNAL*. Where "n" is the DLCI number assigned to the port. If it is set to *INTERNAL*, it represents the router address.
Metric: *(text field)*	Indicates the number of hops required to reach the remote IP network from *0* to *15*.
Time To Live: *(text field)*	Indicates the amount of time (in seconds) that an address can remain inactive before it is deleted. If the field is set to "*4evr*" (forever) the address will not be deleted; it is entered manually and will not age.

Dumping an IP Route Table

1. To dump a IP Route Table select **Dump IP Route Table**.

The IP Route Table Menu is displayed.

Figure 9-11: *IP Route Table Display Menu*

```
System ID: DNX-1u No. 1                                          Help = [?]
Sycamore Networks, Inc.              DNX-1u

IP route table display menu             Page 1 of 69

Address/Mask Bits  NextHop         Port       Metric  TTL   Type      UseCt
10.100.3.3/32      Direct          Internal   0       4evr  stat      2007
10.100.2.0/24      196.0.1.2       WAN1/42    75      4evr  OSPF      385
10.100.1.0/24      196.0.1.11      WAN1/41    75      4evr  OSPF      394
10.100.3.0/24      Direct          LAN        0       180   dyn       2
196.0.1.2/32       Direct          WAN1/42    0       155   dyn       0
196.0.1.11/32      Direct          WAN1/41    0       155   dyn       0
196.0.1.13/32      Direct          Internal   0       4evr  stat      8191
196.0.1.3/32       Direct          Internal   0       4evr  stat      8162
196.0.1.0/24       Direct          WAN1/41    0       180   dyn       0





                                       Page next/prev = ['+'/'-']
```

The IP Route Table Display Menu is a "read only" screen. For more information on these fields refer to *Field Descriptions*.

Field Descriptions

Table 9-3 lists the field descriptions for the Dump IP Route Table Menu.

Table 9-3: *IP Route Table Display Menu Field Descriptions*

Field	Description
Address/Mask Bits: *(display field)*	Displays the address and the mask bits for which the routing information is being displayed.
Next Hop: *(display field)*	Displays the IP address to which an IP frame is to be forwarded. The next hop is represented in "dotted decimal notation". ***Note:*** *This field specifies* ***direct*** *if there is a direct connection to a device.*
Port: *(display field)*	Identifies the port from which the datagram is sent, either LAN or one of the various flavors of WAN (see the Port description of Show IP Route. If it is sent to Internal, it represents the router address.
Hops: *(display field)*	Indicates the number of hops required to reach the remote IP network from *0* to *15*.
TTL (Time To Live): *(display field)*	Displays the amount of time (in seconds) that an address can remain inactive before it is deleted. If the field is set to 4evr (forever) the address will not be deleted; it is entered manually and will not age.
Type: *(display field)*	Indicates the type of route, either *static* or *dynamic*.
UseCt: *(display field)*	Displays the number of times the route is used since the last update.

Using the ARP Table Utility

ARP stands for ***A****ddress* ***R****esolution* ***P****rotocol* as defined by RFC 1392. ARP is used to map physical (MAC) addresses to the IP addresses that are recognized in the local network. The physical addresses are dynamically discovered, and the ARP table is used to maintain the correlation between each IP address and its corresponding MAC address. ARP provides the protocol rules for making a correlation and providing address conversion in both directions. Once an ARP Table entry exists, the local host can send network packets directly to the other host. If the ARP table entry expires, the host resorts to using ARP again to contact the other system.

To access the ARP Table utility, follow the procedure below.

1. From the Router Utilities Menu screen select **ARP Table**.

   The ARP Table screen is displayed.

Figure 9-12: *ARP Table Display*

```
System ID: DNX-1u No. 1                                          Help = [?]
Sycamore Networks, Inc.              DNX-1u
                                   ARP Table
Protocol Address    Hardware Address     State      Time To Live
------------------- -----------------    ---------  ------------
192.168.230.1       00:04:9A:43:6C:0A    Resolved   594
192.168.230.193     00:04:75:C7:03:9C    Resolved   266
192.168.230.121     00:50:DA:8D:FC:64    Resolved   489
192.168.230.210     00:20:54:30:0B:BA    Resolved   489









                                         Page 1 of 16
                                         Clear ARP table    = ['C']
                                         Page next/prev =     ['+'/'-']
```

2. The only function that can be performed from this field is by pressing **C** to clear the ARP table.

Field Descriptions

Table 9-4 lists the field descriptions for the ARP Table utility.

Table 9-4: *ARP Table Utility Field Descriptions*

Field	Description
Protocol Address: *(display field)*	The IP address of the remote host.
Hardware Address: *(display field)*	The physical (MAC) address associated with the Protocol IP address.
State: *(display field)*	If the router is in a Resolved state, an ARP reply message is received and the address is verified. If the router is in a Pending state, the address has not been resolved; the router is waiting for an ARP reply message.
Time To Live: *(display field)*	The amount of time (in seconds) the address can remain inactive before it will be deleted. The maximum count is *10* minutes (*600* seconds).

Using the Trace IP Utility

Trace IP tracks IP traffic (packets) to or from the Router Subsystem. It shows the source and destination of each packet, as well as the port on which the traffic is sent or received. It also lists the protocol being used (Transmission Control Protocol or User Datagram Protocol).

Note: *Trace IP only traces packets destined for or generated by the Router Subsystem. Traffic passing through the router is not traced.*

To access the Trace IP utility, follow the procedure below.

1. From the Router Utilities Menu screen select **Trace IP**.

   The Trace IP log is displayed.

Figure 9-13: *Trace IP Utility Display (Trace Log)*

```
System ID: DNX-1u No. 1                                          Help = [?]
Sycamore Networks, Inc.              DNX-1u
-----------------------------------Trace log---------------------------------
in  port 0   TCP  src=192.168.232.150: 1194 dst=192.168.232. 90: 4006 l=40
out port 0   TCP  src=192.168.232. 90: 4006 dst=192.168.232.150: 1194 l=183
in  port 0   TCP  src=192.168.232.150: 1194 dst=192.168.232. 90: 4006 l=40
out port 0   TCP  src=192.168.232. 90: 4006 dst=192.168.232.150: 1194 l=231
in  port 0   TCP  src=192.168.232.150: 1194 dst=192.168.232. 90: 4006 l=40
out port 0   TCP  src=192.168.232. 90: 4006 dst=192.168.232.150: 1194 l=231
in  port 0   TCP  src=192.168.232.150: 1194 dst=192.168.232. 90: 4006 l=40
out port 0   TCP  src=192.168.232. 90: 4006 dst=192.168.232.150: 1194 l=231
in  port 0   TCP  src=192.168.232.150: 1194 dst=192.168.232. 90: 4006 l=40
out port 0   TCP  src=192.168.232. 90: 4006 dst=192.168.232.150: 1194 l=235
in  port 0   TCP  src=192.168.232.150: 1194 dst=192.168.232. 90: 4006 l=40
out port 0   TCP  src=192.168.232. 90: 4006 dst=192.168.232.150: 1194 l=227
in  port 0   TCP  src=192.168.232.150: 1194 dst=192.168.232. 90: 4006 l=40
out port 0   TCP  src=192.168.232. 90: 4006 dst=192.168.232.150: 1194 l=225
in  port 0   TCP  src=192.168.232.150: 1194 dst=192.168.232. 90: 4006 l=40
out port 0   TCP  src=192.168.232. 90: 4006 dst=192.168.232.150: 1194 l=139
in  port 0   TCP  src=192.168.232.150: 1194 dst=192.168.232. 90: 4006 l=40
out port 0   TCP  src=192.168.232. 90: 4006 dst=192.168.232.150: 1194 l=51

[C]lear trace log
```

Note: *The screen will refresh occasionally. There are no addresses displayed at first, then they will gradually fill in as routes are traced.*

2. The only function that can be performed from this field is by pressing **C** to clear the trace log.

WAN Commands

There are *seven* utilities associated with the WAN commands:

- LAN and WAN Status
- Logical Port Status
- Frame Relay Status
- Frame Relay DLCI Statistics
- PPP Status
- LAPB Status
- XOT Status

Using the LAN and WAN Status Utility

The LAN and WAN status utility provides physical port statistics for both the LAN port and a selected WAN port.

To access the LAN and WAN Status utility, follow the procedure below.

1. From the Router Utilities Menu screen select **LAN and WAN Status**.

   The Physical Port Statistics screen is displayed.

Figure 9-14: *Physical Port Statistics Display*

```
System ID: DNX-1u No.1                                          Help = [?]
Sycamore Networks, Inc.              DNX-1u
                           Physical Port Statistics
LAN port status:                        Physical address: [00:20:54:30:0b:ba]
Transmitted frames.: 216245             Received frames.: 252381
Transmit discards..: 0                  Receive discards: 0
Transmit errors....: 0                  Receive errors..: 0
Transmit collisions: 31                 Filtered frames.: 0


                                 WAN Port Status
Virtual Port.......: WAN 1

Port state.........: In service
WAN protocol.......: Frame relay       Management mode....: LMI
Transmitted frames.: 21002             Network/User mode..: Network
Transmit errors....: 0                 Received FECN......: 0
Received frames....: 20565             Received BECN......: 0
Receive errors.....: 5


                                        Reset counters =    ['R']
```

2. From this screen you can select a WAN port (WAN 1 - WAN 14) by pressing **Enter** or **B**, or resetting the counters by pressing **R**.

3. Refer to *Field Descriptions* for additional information.

Field Descriptions

Table 9-5 lists the field descriptions for a LAN and WAN status.

Table 9-5: *Physical Port Statistics Display Field Descriptions*

Field	Description
LAN Port Status	
Transmitted Frames: *(display field)*	Displays the number of frames this interface forwarded to the LAN.
Transmit Discards: *(display field)*	Displays the number of frames that could not be transmitted due to errors or memory limitations.
Transmit Errors: *(display field)*	Displays the number of times the maximum transmit collisions were reached.
Transmit Collisions: *(display field)*	Indicates the number of transmit collisions.
Physical address: *(display field)*	Displays the Ethernet (MAC) address of the LAN interface.
Received Frames: *(display field)*	Displays the number of frames this interface received from the LAN. The bridge examines the destination addresses of these frames and the frame is either *forwarded* or *filtered*.
Receive Discards: *(display field)*	Indicates the number of received frames that were discarded because of errors or memory limitations.
Receive Errors: *(display field)*	Indicates the number of frames received with CRC or alignment errors.
Filtered Frames: *(display field)*	Indicates the number of received frames that were filtered.
WAN Port Status	
Virtual Port: *(option field)*	Allows you to select a virtual port (WAN 1-14) to view statistics.
Port State: *(display field)*	Displays the state of the WAN interface, either: • *In Service* - Valid frames are being received. • *Out of Service*.
WAN Protocol: *(display field)*	Indicates the protocol being used on the WAN interface, either *PPP* or *Frame Relay*. Displays*????* if unknown or not configured.
Transmitted Frames: *(display field)*	Indicates the number of frames this interface transmitted to the WAN.
Transmit Errors: *(display field)*	Indicates the number of frames this interface transmitted with errors.
Received Frames: *(display field)*	Indicates the number of frames this interface received from the WAN.
Receive Errors: *(display field)*	Indicates the number of frames received with CRC or alignment errors.

Table 9-5: *Physical Port Statistics Display Field Descriptions (Continued)*

Field	Description
Management Mode: *(display field)* (Frame Relay only)	Displays the Frame Relay Management Mode being used, either *ANSI T1.617D, CCITT Q.933A*, *LMI* or *None*.
Network/User Mode: *(display field)* (Frame Relay only)	Indicates the state of the User Network Interface (UNI), either Network Mode (Point-to-Point and/or test applications) or the user mode (connected to a carrier with a switch).
Received FECN: *(display field)* (Frame Relay only)	The number of frames received with a Forward Explicit Congestion Notification (FECN).
Received BECN: *(display field)* (Frame Relay only)	The number of frames received with a Backward Explicit Congestion Notification (BECN).

Using the Logical Port Status Utility

The Logical Port Status utility provides a status for every configured logical port. The screen will refresh itself every 10 seconds.

To access the Logical Port Status utility, follow the procedure below.

1. From the Router Utilities Menu screen select **Logical Port Status**.

   The Logical Port Status screen is displayed.

Figure 9-15: *Logical Port Status Display*

```
System ID: DNX-1u No.1                                          Help = [?]
Sycamore Networks, Inc.              DNX-1u
                              Logical Port Status
Protocol       Port   DLCI Status       Protocol       Port   DLCI Status
-------------- ------ ---- --------     -------------- ------ ---- --------
Ethernet       LAN    ---- Active
PPP            ASYNC2 ---- Active
PPP            ASYNC3 ---- Active
PPP            ASYNC4 ---- Active
Frame Relay    WAN 1  0016 Active
PPP            WAN 2  ---- Inactive
PPP            WAN 3  ---- Inactive
```

Field Descriptions

Table 9-6 lists the field descriptions for a Logical Port status.

Table 9-6: *Logical Port Status Field Descriptions*

Field	Description
Protocol: *(display field)*	Indicates the protocol configured for the logical port. For LAN interfaces the only option is *Ethernet II*. For WAN interfaces: *PPP*, *Multilink PPP* or *Frame Relay* (WAN 1 only).
Port: *(display field)*	Displays the physical port where the frames are transmitted, either *LAN*, *WAN 1-14* or *ASYNC 1-6*.
DLCI: *(display field)*	Displays the Data Link Control Identifier (DLCI). Only relevant for WAN 1 when running Frame Relay. For the WAN 2-14, ASYNC 1-6, and LAN ports, this field is always empty.
Status: *(display field)*	Indicates if the port is *Active* (traffic is being routed over it) or *Inactive* (no traffic).

Using the Frame Relay Status Utility

This utility allows you to view the Frame Relay Port Status for WAN 1 when running the Frame Relay protocol.

To access the Frame Relay Status utility, follow the procedure below.

1. From the Router Utilities Menu screen select **Frame Relay Status**.

   The Frame Relay Port Status screen is displayed.

Figure 9-16: *Frame Relay Port Status Display*

```
                              Frame Relay Port Status
enabled...:   1
instance..:   0  wan port...:   1  poll count:   5  full status.:   0
user SSN..:  17  user RSN...: 167  ntwk SSN..:   0  ntwk RSN....:   0
ntwk mode.:   0  mgmt mode..:   1  errors....:   0  max errors..:   3
win size..:   4  poll cycles:   6  interval..:  10  verification:  15
sent poll.:   0  recv'd poll:   0  out-of-svc:   0  spare.......:   0
window of events: [0,0,0,0,0,0,0,0,0,0,0,0,0,0,0,1]
active dlci(s)..: 102,103,104,105,106,107,108,109,110,111,112,113,114,115,...
reported dlci(s): 103,104,105,106,107,108,109,110,111,112,113,114,115,116,...
last msg size = 14
last management message:
00,01,03,08,00,7d,95,01,01,01,03,02,a7,11,54,90,03,03,0a,64,
03,87,02,02,02,02,00,70,64,e3,3c,33,3e,20,43,20,30,35,33,38,
20,31,33,3a,35,38,20,30,33,2f,31,36,20,31,2e,53,59,53,20,20,

last error code = 0 last error time = 2165
last errored message: fc,e1,03,cc,45,c1,00,40,f9,2d,00,00,40,59,da,d9,
Error History: 0005, 1100, 0005, 0005, 0005, 0005, 0005, 0005, 0005, 0005, 0005,
 0005, 0005, 0005, 0005, 0005, 0005, 0005, 0005, 0005, 0005, 0005, 0005, 0005, 0
005, 0005, 0005, 0005, 0005, 0000, 0000, 0000,

Press any key to continue...
```

Note: *This menu is accessible only when WAN 1 is configured for Frame Relay.*

Field Descriptions

Table 9-7 lists the field descriptions for the Frame Relay Status utility.

Table 9-7: *Frame Relay Status Utility Field Descriptions*

Field	Description
Enabled: *(display field)*	Displays *1* when Frame Relay is enabled, since Frame Relay is only applicable to WAN 1.
Instance: *(display field)*	Indicates an internal process instance.
User SSN: *(display field)*	Displays the user's Send Sequence Number (SSN) of the last transmitted message to the network side.
Ntwk Mode: *(display field)*	If this field is set to *1*, the router is configured for the Network Mode. If it is set to *0*, the router is configured for the User Mode.
Win Size: *(display field)*	Displays the size of the sliding window used by the network to determine whether the router is *active*. After a router is declared *inactive*, the network will wait a specified number of poll cycles before declaring the device "active" again.
Sent Poll: *(display field)*	Displays *1* if the user side sent a poll to the network side during the last interval.
Window of Events: *(display field)*	The Router looks at the first four elements of the array. If three are in error, the unit declares itself out of service.
Active DLCI(s): *(display field)*	Displays the first 16 active DLCIs (logical ports). ***Note:*** *Many active/reported DLCIs are displayed on one line. If there are more active/ reported DLCIs than can be displayed, an ellipsis is displayed at the end of the line.*
Reported DLCI(s): *(display field)*	Displays the first 16 DLCIs reported by the network regardless of their state. ***Note:*** *Many active/reported DLCIs are displayed on one line. If there are more active/ reported DLCIs than can be displayed, an ellipsis is displayed at the end of the line.*
WAN Port: *(display field)*	Displays the WAN port running Frame Relay, always WAN 1.
User RSN: *(display field)*	Displays the user's Receive Sequence Number (RSN) of the last received message from the network.
Mgmt Mode: *(display field)*	Displays the active Management Mode: • *0* = None • *1* = ANSI • *2* = CCITT • *3* = LMI
Poll Cycles: *(display field)*	Indicates the number of poll cycles to occur before a full status request is issued. In Figure 9-16 illustrates that six poll cycles will occur before a full status request is issued.
Recv'd Poll: *(display field)*	Displays *1* if the network side received a poll from the user side during the last interval.
Poll Count: *(display field)*	Indicates the number of the current poll cycle. This number will only go as high as the number defined in the poll cycle parameter.
Ntwk SSN: *(display field)*	Displays the network's SSN of the last transmitted message to the user's side.
Errors: *(display field)*	Displays *1* if an error was detected during the last interval on either the network or user side.
Interval: *(display field)*	Displays the frequency at which the network is polled for status.

Table 9-7: *Frame Relay Status Utility Field Descriptions (Continued)*

Field	Description
Out-of-Svc: *(display field)*	Displays *1* if the router is in service, or *0* if the router is out of service.
Full Status: *(display field)*	Indicates the frequency at which the router requests full status information. The full status frequency is relative to the number of requests for regular status. The range is from *1* to *255*. A value of 6 indicates that 1 of every 6 status requests will be a request for full status. This parameter is only applicable when the router is configured for User Mode.
Ntwk RSN: *(display field)*	Displays the network's RCN of the last received message from the user's side.
Max Errors: *(display field)*	Indicates the maximum number of errors that can occur during a sliding window events count before the frame relay device is declared "*inactive*" or "*out-of-service*."
Verification: *(display field)*	Displays the network's verification timer setting. This value is generally set higher than the polling interval value. For example, if the network side interval is set to *10* and the verification interval is set to *15*. This allows the unit to wait a little longer than the network waits for a poll from the user side. It is considered an error if a poll is not received from the user side within the specified time.
Spare: *(Unused field)*	This field is not currently used.
Last Msg Size: *(display field)*	Displays the size (in bytes) of the last message that was seen by the router.
Last Management Message: *(display field)*	Displays the last management message that was seen by the router.
Last Error Code: *(display field)*	Displays a code for the last Frame Relay error seen by the Router, either: • *1* = Unknown • *2* = Receipt of Frame Too Short • *3* = Receipt of Frame Too Long • *4* = Illegal DLCI • *5* = Unknown DLCI • *6* = Data Link Management Protocol Error • *7* = Data Link Management Unknown Information Element • *8* = Data Link Management Sequence Error • *9* = Data Link Management Unknown Report Type • *10* = No Error Since Reset
Last Error Time: *(display field)*	Displays the time the last error occurred.
Last Errored Message: *(display field)*	Displays the first 16 bytes of the last message received. If no errors occurred, this field is irrelevant.

Table 9-7: *Frame Relay Status Utility Field Descriptions (Continued)*

Field	Description
Error History: *(display field)*	Provides a history of the last 32 frame relay errors encountered by the router. As errors occur, the latest error code is added to the beginning of this field. The oldest of the 32 error codes is dropped from the end of the field. The error types are encoded in hexadecimal format, with the **right** two digits being the cause codes set forth in RFC 1315 and 2115, and the **left** two digits representing a manufacturer-unique cause code that further explains the cause of the error. The cause codes are provided below: **RFC 1315/2115 Cause Codes (Last Two Digits)** • *00* - No Cause Specified • *01* - Unknown Error • *02* - Receive Short (Frame too short for Frame Relay)
Error History: Cont... *(display field)*	• *03* - Receive Long (Frame too long for Frame Relay) • *04* - Illegal Address (Illegal DLCI) • *05* - Unknown Address (Unknown DLCI) • *06* - DLCMI Protocol Error (Frame Relay protocol error) • *07* - DLCMI Unknown IE (Unknown information element) • *08* - DLCMI Sequence Error (Sequence number error) • *09* - DLCMI Unknown Report (Unknown report type) • *0A* - No Error Since Reset (No errors since last reset) **Manufacturer-Unique Cause Codes (First Two Digits)** • *00* - No Cause Specified • *01* - Bad Extended Address Bits • *02* - Bad Control Field • *03* - Bad Sub Network Address Protocol • *04* - Frame Relay Management - Unnumbered Info • *05* - CCITT, ANSI Management - Protocol Discriminator Error • *06* - LMI Management - Protocol Discriminator Error • *07* - Invalid Dummy Call Reference • *08* - Bad Status Message Byte • *09* - Invalid Locking Shift Byte • *0A* - Report Type IE - Bad Report Information Element Byte • *0B* - Report Type IE - Bad Information Element Length • *0C* - Report Type IE - Bad Type of Report Byte • *0D* - Bad Link Integrity Verification Byte • *0E* - Bad Link Integrity Verification Length • *0F* - Report Type IE - Invalid Type of Report Byte • *10* - Bad PVC Status Information Element • *11* - No Response to Status Enquiry Poll • *12* - Bad Organizationally Unique Identifier

Using the Frame Relay DLCI Statistics Utility

This utility allows the user to view the Frame Relay DLCI statistics for WAN 1 when it is running Frame Relay protocol.

To access Frame Relay DLCI Statistics utility, follow the procedure below.

1. From the Router Utilities Menu screen select **Frame Relay DCLI**.

   The DCLI Statistics screen is displayed.

Figure 9-17: *DLCI Statistics Display*

```
System ID: DNX-1u No.1                                          Help = [?]
Sycamore Networks Inc.              DNX-1u
                                 DLCI Statistics
WAN DLCI  Rcv BECN   Rcv FECN  Sent Pkts  Sent Bytes  Rcv Pkts  Rcv Bytes
--- ---- ---------- ---------- ---------- ---------- ---------- ----------
  1   16          0          0      34103   12107220      33054   13611698



                                     Page up/down =      ['+'/'-']
```

Note: *This menu is accessible only when WAN 1 is configured for Frame Relay.*

Field Descriptions

Table 9-8 lists the field descriptions for the Frame Relay DCLI Statistics utility.

Table 9-8: *DLCI Statistics Display Field Descriptions*

Field	Description
WAN *(display field)*	Displays the WAN port on which statistics are reported, always *WAN 1* for DNX-1u.
DLCI *(display field)*	Displays the DLCI number embedded in the Frame Relay header. Each DLCI represents an independent data channel that can display on a WAN Port.
Rcv BECN *(display field)*	Indicates the congestion level at the receiver on the remote end of the DLCI connection.
Rcv FECN *(display field)*	Indicates the congestion level in the transmitting path to the remote end of the DLCI connection.
Sent Pkts *(display field)*	Displays the total number of number of packets sent.

Table 9-8: *DLCI Statistics Display Field Descriptions*

Field	Description
Sent Bytes *(display field)*	Displays the total number of number of bytes sent in the sent packets.
Rcv Pkts *(display field)*	Displays the total number of number of packets received.
Rcv Bytes *(display field)*	Displays the total number of number of bytes received in the received packets.

Using the PPP Status Utility

This utility allows the user to view the status of a virtual port that is running PPP protocol.

To access the PPP Status utility, follow the procedure below.

1. From the Router Utilities Menu screen select **PPP Status**.

   The PPP Port Status screen is displayed.

Figure 9-18: *PPP Port Status Display*

```
System ID: DNX-1u No.1                                          Help = [?]
Sycamore Networks, Inc.              DNX-1u
                                PPP Port Status

Virtual Port: WAN 1

Control protocol state...              Negotiated options...

LCP.........: Closed                   Multilink.............: No
IPCP........: Closed                   Protocol Compression..: No
                                       Address Compression...: No
                                       Async Map.............: No
                                       Magic Number..........: No
Loop Detected.........: No
```

The PPP Port Status Display is a read-only screen and does not refresh automatically. Press any key to exit the screen and update the information. Within this screen the only function available is to select a port (WAN 1-14 or ASYNC 1-6) by pressing **Enter** or **B**.

Field Descriptions

Table 9-9 provides field descriptions for the PPP Status utility.

Table 9-9: *PPP Port Status Display Field Descriptions*

Field	Description
Virtual Port: *(display field)*	Displays the virtual port being displayed, either *WAN port 1-14* or *ASYNC port 1-6*.
Control Protocol State	
LCP (Link Control Protocol) *(display field)*	Displays the status of Link Control Protocol, either: • *Opened* - Config ACK, both sent and received • *Request Sent* - Attempt sent to Config connection but Config not received • *ACK Sent* - a Config Request and Config ACK sent but Config ACK not received • *ACK Received* - a Config Request and Config ACK received but config ACK not sent • *Closed* - terminate ACK received
IPCP (IP Control Protocol) *(display field)*	If IP is enabled, the status of IP Control Protocol is displayed, either: • *Opened* - Config ACK, both sent and received • *Request Sent* - Attempt sent to Config connection but Config not received • *ACK Sent* - a Config Request and Config ACK sent but Config ACK not received • *ACK Received* - a Config Request and Config ACK received but config ACK not sent • *Closed* - terminate ACK received
Loop Detected: *(display field)*	If *yes* is displayed, the router is in loopback state.
Negotiated Options	
Multilink: *(display field)*	If *yes* is displayed, a Multilink protocol is being used on the WAN.
Protocol Compression: *(display field)*	If *yes* is displayed, the router performed protocol field compression.
Address Compression: *(display field)*	If *yes* is displayed, the router performed address field compression.
Async Map: *(display field)*	In synchronous applications, this field will read *no*. In asynchronous applications, this field will read *yes* and the unit will negotiate the use of control and escape characters, resulting in the use of less bandwidth.
Magic Number: *(display field)*	Displays a random number is assigned to each end of a PPP connection. A message containing this random number is periodically transmitted. Receipt of a message with the same random number indicates the link is in loop. If this field reads *yes* it indicates that each end has successfully negotiated a unique random number.

Accessing the LAPB Status Utility

The LAPB status utility allows the user to view the status of the LAPB protocol.

Note: *The LAPB Port Status Display shows the status of the WAN ports that are operationally UP (running XOT over LAPB protocol). When the WAN ports are operationally DOWN, none of the fields are displayed on the screen.*

To access the LAPB Status utility, follow the procedure below.

1. From the Router Utilities Menu screen select **LAPB Status**.

   The LAPB Port Status screen is displayed.

Figure 9-19: *LAPB Port Status Display*

```
System ID: DNX-1u No.1                                          Help = [?]
Sycamore Networks, Inc.              DNX-1u
                               LAPB Port Status

Virtual Port.......: WAN 7

Link state: Up
REJ in frames: 0
REJ out frames: 0
T1 Timeouts: 117
Last FRMR sent: 0
Last FRMR received: 0
Modulo: 8
```

Field Descriptions

Table 9-10 provides field descriptions for the LAPB Status utility.

Table 9-10: *LAPB Port Status Display Field Descriptions*

Field	Description
Virtual Port: *(display field)*	Displays the LAPB Status being accessed for a LAPB interface on a specific virtual port.
Link State: *(display field)*	Displays the status of the WAN ports that are operationally up. If the WAN ports are running XOT over LAPB protocol, *UP* is displayed in this field. If the WAN ports are operationally *DOWN*, none of the fields are displayed; the entire screen is empty.
REJ in frames: *(display field)*	Indicates the number of REJ or SREJ frames received by this station.
REJ out frames: *(display field)*	Indicates the number of REJ or SREJ frames sent by this station.
T1 Timeouts: *(display field)*	Displays the number of times a re-transmission was effected by the T1 Timer expiring.
Last FRMR sent: *(display field)*	Displays the information field of the FRMR most recently sent. If no FRMR is sent (which is the normal case) or the information is not available, this will be an OCTET STRING of zero length.
Last FRMR received: *(display field)*	Displays the information field of the FRMR most recently received. If no FRMR is received (which is the normal case) or the information is not available, this will be an OCTET STRING of zero length.
Modulo: *(display field)*	Displays the size of the sequence numbers used to number frames, either *8* or *128*.

Using the XOT Status Utility

This utility allows you to view the status of the XOT address translation.

To access the XOT Status utility, follow the procedure below.

1. From the Router Utilities Menu screen select **XOT Status**.

   The XOT Status screen is displayed.

Figure 9-20: *XOT Status Display*

```
System ID:                                                          Help = [?]
Sycamore Networks, Inc.              DNX-1u
                                    XOT Status
WAN Local X.121    Remote X.121   Remote IP addr  Conn  Packets Sent/Recvd
2   1234567        7654321        192.168.228.198 InAct 0/0
NA  0              0              0.0.0.0         InAct 0/0
NA  0              0              0.0.0.0         InAct 0/0
NA  0              0              0.0.0.0         InAct 0/0
NA  0              0              0.0.0.0         InAct 0/0
NA  0              0              0.0.0.0         InAct 0/0
NA  0              0              0.0.0.0         InAct 0/0
NA  0              0              0.0.0.0         InAct 0/0
NA  0              0              0.0.0.0         InAct 0/0
NA  0              0              0.0.0.0         InAct 0/0
NA  0              0              0.0.0.0         InAct 0/0
NA  0              0              0.0.0.0         InAct 0/0
NA  0              0              0.0.0.0         InAct 0/0
NA  0              0              0.0.0.0         InAct 0/0
NA  0              0              0.0.0.0         InAct 0/0
NA  0              0              0.0.0.0         InAct 0/0
NA  0              0              0.0.0.0         InAct 0/0
NA  0              0              0.0.0.0         InAct 0/0
NA  0              0              0.0.0.0         InAct 0/0
NA  0              0              0.0.0.0         InAct 0/0
```

Field Descriptions

Table 9-10 provides field descriptions for the XOT Status utility.

Table 9-11: *XOT Port Status Display Field Descriptions*

Field	Description
WAN: *(display field)*	Displays the WAN port for a particular status entry.
Local X.121: *(display field)*	Displays the X.25 over TCP/IP (XOT) X.121 conforming local address for a particular status entry.
Remote X.121: *(display field)*	Displays the X.25 over TCP/IP (XOT) X.121 conforming remote address for a particular status entry.
Remote IP addr: *(display field)*	Displays the X.25 over TCP/IP (XOT) IP address for a particular status entry.
Conn: *(display field)*	Indicates the connection state of the XOT address translation, either *Active* or *Inactive*.
Packets Sent/Recvd: *(display field)*	Indicates the number of packets sent or received during the XOT address translation.

Note: *Although the XOT Status screen can display up to 20 calls, the current system capacity is 11 calls.*

SNMP Commands

There is only one utility associated with SNMP, it is the MIB Table.

Using the MIB Table Utility

The MIB Table Display is significant for those running IP traffic. The table displays some of the MIB-II parameters as defined in RFC 1213.

To access the MIB Table utility, follow the procedure below.

1. From the Router Utilities Menu screen select **MIB Table**.

   The MIB II screen is displayed.

Figure 9-21: *MIB Table Display*

```
                                MIB II Display
***** IP variables *****
ipInReceives...:      4969 ipInHdrError:         0 ipInAddrErrors:           0
ipForwDatagrams:        11 ipInDiscards:         0 ipInDelivers:          5884
ipUnknownProtos:         0 ipOutRequest:         0 ipOutDiscard:             0
ipOutNoRoutes..:         0 ipReasmOKs  :         0 ipReasmFails:             0
***** ICMP variables *****
icmpInMsgs.....:         0 icmpInErrors:         0 icmpInDestUnreac:         0
icmpInTimeExcds:         0 icmpInParmPr:         0 icmpInSrcQuenchs:         0
icmpInEchos....:         0 icmpInEchoRp:         0 icmpInTimestamps:         0
icmpInTstampRep:         0 icmpInAddrMa:         0 icmpInAddrMaskRe:         0
icmpOutMsgs....:         0 icmpOutError:         0 icmpOutDestUnrea:         0
icmpOutTimeExcd:         0 icmpOutParmP:         0 icmpOutSrcQuench:         0
icmpOutRedirect:         0 icmpOutEchos:         0 icmpOutEchoReps :         0
icmpOutTimestam:         0 icmpTimesRep:         0 icmpOutAddrMasks:         0
icmpOutAddrMaRe:         0
***** UDP variables *****
udpInDatagrams.:      5884 udpNoPorts  :         0 udpInErrors     :         0
udpOutDatagrams:      2668
Press any key to continue...
```

Field Descriptions

Table 9-12 provides field descriptions for the MIB Table utility.

Table 9-12: *MIB Table Display Field Descriptions*

Field	Description
IP Variables	
ipInReceives: *(display field)*	Displays the total number of input datagrams received from interfaces, including those received in error.
ipInHdrError: *(display field)*	Displays the number of input datagrams discarded due to errors in their IP headers, including bad checksums, version number mismatch, other format errors, time-to-live exceeded, errors discovered in processing their IP options.
ipInAddrErrors: *(display field)*	Displays the number of input datagrams discarded because the IP address in their IP header's destination field was not a valid address to be received at this entity. This count includes invalid addresses, such as *0.0.0.0*, and addresses of unsupported Classes, such as Class E. For entities that are not IP Gateways and do not forward datagrams, this counter includes datagrams discarded because the destination address was not a local address.
ipForwDatagrams: *(display field)*	Indicates the number of input datagrams for which this entity was not their final IP destination, as a result of which an attempt was made to find a route to forward them to that final destination. In entities which do not act as IP Gateways, this counter will include only those packets which were Source-Routed using this entity, and the Source-Route option processing was successful.
ipInDiscards: *(display field)*	Indicates the number of input IP datagrams for which no problems were encountered to prevent their continued processing, but which were discarded, such as for lack of buffer space. This counter does not include any datagrams discarded while awaiting re-assembly.
ipInDelivers: *(display field)*	Indicates the total number of input datagrams successfully delivered to IP user-protocols, including ICMP.
ipUnknownProtos: *(display field)*	Displays the number of locally-addressed datagrams received successfully but discarded because of an unknown or unsupported protocol.
ipOutRequest: *(display field)*	Displays the total number of IP datagrams which local IP user-protocols, including ICMP, supplied to IP in requests for transmission. Note that this counter does not include any datagrams counted in *ipForwDatagrams*.
ipOutDiscard: *(display field)*	Indicates the number of output IP datagrams for which no problem was encountered to prevent their transmission to their destination, but were discarded, such as a lack of buffer space. This counter would include datagrams counted in *ipForwDatagrams* if any such packets met this (discretionary) discard criterion.
ipOutNoRoutes: *(display field)*	Indicates the number of IP datagrams discarded because no route could be found to transmit them to their destination. This counter includes any packets counted in *ipForwDatagrams* which meet this no-route criterion. This includes any datagrams which a host cannot route because all of its default gateways are down.
ipReasmOKs: *(display field)*	Indicates the number of IP datagrams successfully re-assembled.

Table 9-12: *MIB Table Display Field Descriptions (Continued)*

Field	Description
ipReasmFails: *(display field)*	Displays the number of failures detected by the IP re-assembly algorithm for any reason, such as timed out or errors. This is not necessarily a count of discarded IP fragments since some algorithms, notably the algorithm in RFC 815, can lose track of the number of fragments by combining them as they are received.
ICMP Variables	
icmpInMsgs: *(display field)*	Displays the total number of ICMP messages the entity received. This counter includes all those counted by *icmpInErrors*.
icmpInErrors: *(display field)*	Displays the number of ICMP messages the entity received but determined as having ICMP-specific errors, such as bad ICMP checksums, and bad length.
icmpInDestUnreac: *(display field)*	Indicates the number of ICMP Destination Unreachable messages received.
icmpInTimeExcds: *(display field)*	Indicates the number of ICMP Time Exceeded messages received.
icmpInParmPr: *(display field)*	Indicates the number of ICMP Parameter Problem messages received.
icmpInSrcQuenchs: *(display field)*	Displays the number of ICMP Source Quench messages received.
icmpInEchos: *(display field)*	Displays the number of ICMP Echo (request) messages received.
icmpInEchoRp: *(display field)*	Displays the number of ICMP Echo Reply messages received.
icmpInTimestamps: *(display field)*	Displays the number of ICMP Timestamp (request) messages received.
icmpInTstampRep: *(display field)*	Indicates the number of ICMP Timestamp Reply messages received.
icmpInAddrMa: *(display field)*	Displays the number of ICMP Address Mask Request messages received.
icmpInAddrMaskRe: *(display field)*	Displays the number of ICMP Address Mask Reply messages received.
icmpOutMsgs: *(display field)*	Indicates the total number of ICMP messages this entity attempted to send. This counter includes all those counted by *icmpOutError*.
icmpOutError: *(display field)*	Indicates the number of ICMP messages this entity did not send due to problems discovered within ICMP, such as a lack of buffers. This value should not include errors discovered outside the ICMP layer such as the inability of IP to route the resultant datagram. In some implementations there may be no types of error which contribute to this counter's value.
icmpOutDestUnrea: *(display field)*	Indicates the number of ICMP Destination Unreachable messages sent.
icmpOutTimeExcd: *(display field)*	Indicates the number of ICMP Time Exceeded messages sent.
icmpOutParmP: *(display field)*	Indicates the number of ICMP Parameter Problem messages sent.

Table 9-12: *MIB Table Display Field Descriptions (Continued)*

Field	Description
icmpOutSrcQuench: *(display field)*	Displays the number of ICMP Source Quench messages sent.
icmpOutRedirect: *(display field)*	Displays the number of ICMP Redirect messages sent. For a host, this object will always be zero, since hosts do not send redirects.
icmpOutEchos: *(display field)*	Displays the number of ICMP Echo (request) messages sent.
icmpOutEchoReps: *(display field)*	Indicates the number of ICMP Echo Reply messages sent.
icmpOutTimestam: *(display field)*	Indicates the number of ICMP Timestamp (request) messages sent.
icmpTimesRep: *(display field)*	Indicates the number of ICMP Timestamp Reply messages sent.
icmpOutAddrMasks: *(display field)*	Displays the number of ICMP Address Mask Request messages sent.
icmpOutAddrMaRe: *(display field)*	Displays the number of ICMP Address Mask Reply messages sent.
UDP Variables	
udpInDatagrams: *(display field)*	Displays the total number of UDP datagrams delivered to UDP users.
udpNoPorts: *(display field)*	Displays the total number of received UDP datagrams for which there was no application at the destination port.
udpInErrors: *(display field)*	Indicates the number of received UDP datagrams that could not be delivered for reasons other than the lack of an application at the destination port.
udpOutDatagrams: *(display field)*	Indicates the total number of UDP datagrams sent from this entity.

Database

The Database Menu is used to access utilities that allow you to save or restore the configuration database, or to return the DNX-1u to the factory default settings.

Navigation:
DNX-1u Main Menu ↓ Utilities ↓ Database

Accessing Database Utilities

To access Database utilities, follow the procedure below.

1. From the Utilities Menu select **Database**.

   The Database Menu is displayed.

Figure 9-22: *Database Menu*

```
System ID: DNX-1u No. 1                                          Help = [?]
Sycamore Networks, Inc.              DNX-1u


                                Database Menu



                      Database Backup and Restore
                      Return to Default Settings
```

2. From this screen you can perform a database backup and restore or return to default settings.
3. Refer to the following sections for more information.

Prior to a Save/Restore of the DNX-1u's Configuration

You must first create a directory on the host that will store the configuration. Because the configuration consists of several files, a separate directory is required for each DNX-1u.

1. Create a directory on the host that will store the DNX-1u configuration.
2. Run the host's TFTP server.

Accessing the Database Backup and Restore Menu

The DNX-1u system has the capability to save the system configuration database as a software file and to restore the system configuration from previously saved software files.

Since the system configuration is software-based, a standard protocol like, such as TFTP can be used to transfer the system configuration database to a remote host (PC or workstation). Conversely, files that have been copied to a remote host for archival purposes can be uploaded to the DNX-1u for disaster recovery or to facilitate system configuration on new installations.

To access the Database Backup and Restore menu, follow the procedure below.

1. From the Utilities Menu select **Database** and then on **Database Backup and Restore**.

   The Database Backup Menu is displayed.

Figure 9-23: *Database Backup and Restore Menu*

```
System ID: DNX-1u No. 1                                          Help = [?]
Sycamore Networks, Inc.              DNX-1u
                              Database Backup

                                        Current Time: Thursday   , 08:25
Automatic backup enabled: No
Backup frequency: Daily
Day of the week (for weekly backups): Sunday
Start time: 00:00
Restore from host: 1




   Host IP Address    Host Directory                                File Name
-------------------------------------------------------------------------------
1) 0.0.0.0
2) 0.0.0.0
3) 0.0.0.0




B[a]ckup now  [R]estore backup
```

2. Refer to the sections below for additional information.

Field Descriptions

Table 9-13 provides field descriptions for the Database Backup and Restore Menu.

Table 9-13: *Database Backup Menu Field Descriptions*

Field	Description
Automatic Backup Enabled: *(option field)*	Used to *Enable* or *Disable* the automatic database backup to the listed host(s).
Backup Frequency: *(option field)*	Sets the frequency of the database backup, either *Daily* or *Weekly*.
Day of the Week: *(option field)*	Sets the day of the week for the weekly database backups (*Sunday* through *Saturday*).
Start Time: *(option field)*	Sets the time of the day at which the database backup will occur (24-Hour format, even hours only).
Restore from host: *(text field)*	Specifies the host from which the database will be restored. Select *1*, *2* or *3* to select one of the three hosts configured in the fields below.
Host IP address: *(text field)*	Specifies the IP address of a host where the database will be saved or from where it will be restored.
Host Directory: *(text field)*	Specifies the directory on the host where the database will be saved or from where it will be restored.
File Name: *(text field)*	Specifies the file name of the database to be saved or restored.

Configuring an Automatic Backup

The DNX-1u can be configured to automatically save a DNX-1u database file to a remote host. The ***Backup*** operation will gather all of the configuration and connection map files that exist on the DNX-1u, compress them, and send them to the host.

Note: *If you plan to save more than one DNX-1u database file to a host, remember to enter a unique name for each file so that existing files do not get overwritten.*

To configure an automatic backup, follow the procedure below.

1. From the Database Backup Menu, move your cursor to the *Automatic backup enabled* field and press Enter until **Yes** is displayed.
2. Configure the remaining fields on the menu. For more information refer to *Field Descriptions* in Table 9-13.

Note: *In order to use the Automatic Backup utility, the TFTP server MUST be running at the scheduled backup time.*

Configuring a Manual Backup

The Backup operation gathers all of the configuration and connection map files that exist on the DNX-1u, compress them, and save them to a host.

To configure an manual backup, follow the procedure below.

1. First, you must backup the DNX-1u Configuration to a Host and create a directory on the host that will store the DNX-1u's database file. On some UNIX® hosts, a file will also need to be created on the host system, since the TFTP server will not be able to create a file.
2. Initialize the host's TFTP server.
3. Next, from the From the Database Backup Menu, move your cursor to the first *Host IP Address* field, and press **Enter**. Type the IP address of the host where you want to save the file and press **Enter**.
4. Move your cursor to the *Host Directory* field and press **Enter**. Type the path to the directory where the backup file will stored and press **Enter**.

Note: *Based on the type of TFTP server program, the Host Directory path may not need to be input. In such cases, a backslash (\) is all that may be needed.*

5. Move your cursor to the *File Name* field and press **Enter**. Type the input a file name for the backup file (up to eight alphanumeric characters with NO file extension - When the file is to the host it will have a .b extension). Press **Enter** again. Do this for each of the required hosts.

Note: *If you plan to save backup files for more than one DNX-1u to a host, remember to enter a unique name for each file so that existing files do not get overwritten.*

6. Press **a** to save the backup file.

   A message is displayed asking if you want to backup the database to all hosts.

7. Press **Y** to initiate the file transfer.

   A screen similar to the one displayed below illustrates the process of the file transfer.

Figure 9-24: *Database Backup Upload Display*

```
Moving file   - contcl.006    to the backup file
Moving file   - voltme.007    to the backup file
Moving file   - profile       to the backup file
Moving file   - tcoder.009    to the backup file
Moving file   - wancf>        to the backup file
Moving file   - wancf?        to the backup file
Moving file   - wancf@        to the backup file
Moving file   - wancfA        to the backup file
Moving file   - wancfB        to the backup file
Moving file   - wancfC        to the backup file
Moving file   - logp.sum      to the backup file
Moving file   - ospf.cfg      to the backup file
Moving file   - 1con.ind      to the backup file
Moving file   - 2con.ind      to the backup file
Moving file   - 3con.ind      to the backup file
Moving file   - dbbackup      to the backup file
Moving file   - pscfg         to the backup file

Uploading backup file to host #1 at location C:\DNX1u\1ucfg.b

Sending: Size = 032256 Sent = 032256 Remaining = 000000

DB backup operation to host #1 was successful

Press any key to continue...
```

Restoring the Configuration from a Host

The Restore operation gathers the backup database file from the host and restores the files on the DNX-1u.

To restore the configuration from a host, follow the procedure below.

1. Locate the directory on the host that contains the DNX-1u's configuration file.

Note: *When you attempt to locate the backup file on the host, remember the file will have a .b extension.*

2. Initialize the host's TFTP server.
3. Next, from the From the Database Backup Menu, move your cursor to the first *Host IP Address* field, and press **Enter**. Type the IP address of the host the backup files reside and press **Enter**.
4. Move your cursor to the *Host Directory* field and press **Enter**. Type the input the path to the directory where the backup file resides and press **Enter**.

Note: *Based on the type of TFTP server program, the Host Directory path may not need to be input. In such cases, a backslash (\) is all that may be needed.*

5. Move your cursor to the *File Name* field and press **Enter**. Type the input the backup file name (minus the ".b" extension) and press **Enter**.
6. Press **R** to restore the backup file.

   A message is displayed asking if you want to restore the database and the System Manager will reset.

7. Press **Y**.

   A message is displayed asking if you want to preserve the IP information.

8. Press **Y**.

   This will cause the entire database file to be loaded into DNX-1u memory, with the exception of any IP addresses. The system IP configuration will be preserved for future use and the system will be reset. This will take a few minutes.

   Note: *The larger the configuration file, the longer it takes to write the database to FLASH memory.*

9. Once the system is reset and the database restored, a management connection will need to be re-established.

Returning to Default Settings

This utility resets the system configuration to default values, erases all connection maps, erases the flash system, reformats and initializes the database flash memory, and creates default configuration files. Any system configurations and connection maps that were entered will be erased.

CAUTION

This command is service-affecting and should only be performed by knowledgeable personnel. It erases all system configurations and connection maps that have been entered. If you are connected remotely using a WAN link, this command erases the WAN configuration and will require a local connection and reconfiguration in order to reconnect using the WAN.

To return to default settings, follow the procedure below.

1. From the Utilities Menu select **Database** and then on **Return to Default Settings**.

   A message is displayed that indicates defaulting configurations will reset the system.

2. Press **Y** to default the configuration and reset the system.

   A message is displayed asking if you want to preserve the IP information.

3. Press **Y** to preserve the system's IP information, or press **N** to clear IP information. In either case, the system resets and returns to the default settings. This may take several minutes.

CAUTION

Always preserve the IP information if you are accessing the system from a remote location using the LAN unless you also have direct terminal access. If you select **N** at the prompt above, the system's IP information will be deleted and you will be unable to reach the DNX-1u using the network. A direct terminal session will be necessary to re-enter the unit's IP information and re-establish a presence on the LAN.

If you are connected remotely using a WAN link, this command erases the WAN configuration no matter which option you choose. A local connection and reconfiguration will be necessary in order to reconnect using the WAN.

Cold Reset Device

The Cold Reset Device utility is used to reset the entire DNX-1u, including resetting the framers and downloading the FPGA software. It causes the DNX-1u to initialize to its power-up configuration, and during this boot-up cycle, no user data will flow.

Navigation:
DNX-1u Main Menu ↓ Utilities ↓ Cold Reset Device

CAUTION

A Cold Reset takes approximately 1 minute and 45 seconds, and causes data to be interrupted; if possible use a Warm Reset for less interruption.

Performing a Cold Reset

To perform a cold reset, follow the procedure below.

1. From the Utilities Menu select **Cold Reset Device**.

   A message is displayed asking if you want to reset the unit.

2. Press **Y** to perform the reset. This will take approximately 1 minute and 45 seconds for a Cold Reset, after which you will need to log back into the system.

Warm Reset Device

The Warm Reset Device utility is used to reset the DNX-1u, but it does not reset framers or download FPGA software. It causes the DNX-1u to initialize to its power-up configuration, and during this boot-up cycle, no user data will flow.

Navigation:
DNX-1u Main Menu ↓ Utilities ↓ Warm Reset Device

CAUTION

A Warm Reset takes approximately 1 minute and 30 seconds, and causes data to be briefly interrupted.

Performing a Warm Reset

To perform a warm reset, follow the procedure below.

1. From the Utilities Menu select **Warm Reset Device**.

   A message is displayed asking if you want to perform a warm reset.

2. Press **Y** to perform the reset. This will take approximately 1 minute and 30 seconds for a Warm Reset, after which you will need to log back into the system.

Download Software

Software Files and Utilities

There are *two* software files which are used in DNX-1u operation:

- **System Image** - The executable program file used to operate the DNX-1u. The system uses two program images: the online program image, and an offline image. The DNX-1u attempts to boot first from the online image. If that fails, the offline image is loaded. The format of the System Image file is “d1uXXY”, with XXY being the release number of the system image software as follows:

  XX.Y, where XX = Major Release and Y = Minor Release.

- **Boot Image** - The initial machine-language boot-up file that is used in the initialization and power-up phase. This program determines the validity of the system images, loads the online image into dynamic memory, and starts the execution of the system software. It is also used to manage the system during an image switch. The format of the Boot Image file is “d1bXXY”, with XXY being the version number of the boot image software as follows:

  XX.Y, where XX = Major Release and Y = Minor Release.

This section provides information necessary for upgrading and managing DNX-1u software and database files using the system’s built-in utilities. It is divided into two major subsections:

- **Upgrading System Image Software** - Describes the software files and provides procedures for software loading and management.
- **Upgrading Boot Image Software** - Describes the software files and provides procedures for upgrading the boot image software.

Navigation:
DNX-1u Main Menu ↓ Utilities ↓ Download Software

Upgrading System Image Software

System Image Software Upgrades to the DNX-1u can be performed quickly and easily using a Trivial File Transfer Protocol (TFTP). Ideally the TFTP software code transfer should be performed locally through a LAN connection; however, it can be completed remotely through a routed IP WAN environment.

Note: *System Image Software upload is normally restricted to the same or newer software version relative to the version currently in use. Contact Sycamore Networks Customer Support if you need to downgrade to a previous version of software.*

There are *two* distinct parts of the System Image Software Upgrade process. The upgrade file must first be uploaded to the DNX-1u using the TFTP transfer. Then the file must be downloaded from the DNX-1u buffer into non-volatile memory. Procedures for accomplishing a System Image Software Upgrade are provided on the next several pages.

Uploading the File Using TFTP

Note: *There are many different types of TFTP applications. For the purpose of this document, general terms are used when describing TFTP entries.*

1. Copy the selected system image software file from the Sycamore Networks website or software CD to the host PC that will be running the TFTP client application.
2. Start the TFTP Client application on the Host PC.
3. Type in the IP address for the DNX-1u in the **Destination**, **Host**, **FTP Server** or **Target Node** field of the TFTP Client application.

Note: *DNX-1u software files are in binary format and some third-party TFTP applications may be defaulted to another format, such as ASCII, which will corrupt the files and FLASH memory on the module. Check the settings of your TFTP application to ensure that Binary Mode is enabled so that no reformatting will occur when the TFTP transfer takes place.*

4. Enter the Host PC path to the specified system software upgrade file either by typing it in or by clicking on the **Browse** button and locating the file.

Note: *DO NOT alter the file name or format.*

5. Click on **Send**. The system software image upgrade file is uploaded to the DNX-1u. As a security precaution, the image is stored in dynamic memory at this point, and needs a valid administrator to log into the DNX-1u and download the software into non-volatile memory.

Downloading the Program into DNX-1u Non-Volatile Memory

1. Using the TFTP Upload procedure described previously, send the upgraded system image software program to the DNX-1u's IP address.

2. Initiate a Telnet or console session with the DNX-1u and log in as an administrator.

3. From the DNX-1u Main Menu, select **Utilities** and then on **Download Software**.

   The Software Upgrade Center Menu is displayed with the name of the upgraded system image software file displaying in the *Current Program File* field.

Figure 9-25: *Software Upgrade Center Menu*

```
System ID: DNX-1u No.1                                          Help = [?]
Sycamore Networks, Inc.              DNX-1u
                           Software Upgrade Center
Current Program File: d1u040p.bin
Download Status: Idle
File Size      : 1120212

      Boot Image
      System Image









[L]oad current   [D]elete program file
```

4. Move your cursor to *System Image* field and press **L** to load the current image.

   A message is displayed asking if you want to send the current program file to flash.

Note: *You can reset /not reset the unit after burning new image to flash memory. If the unit is not reset, the online file continues running. The system will attempt to boot the newly downloaded image on the next power-up or reset. An image switch can be performed at any time.*

5. Press **Y** to start downloading the file into DNX-1u memory.

   A message is displayed asking if you want to reset the system after downloading.

6. Press **Y** to load the program into memory and reboot the DNX-1u with the new software. Press **N** to load the program into memory, but keep running the existing program. At a later time, the image system can be rebooted to execute the new image.

CAUTION

While the software download occurs in the background, service will be interrupted for several minutes during the system reboot while the system decompresses the software and resets.

7. During the actual download, there will be a delay while the new code is burned into FLASH memory and the system resets. A screen similar to the following is displayed while the download is in process.

Figure 9-26: *System Image File Download Display*

```
File download in progress
Please be patient, this operation may take several minutes


Current File: d1u040p.bin
Byte Count:   1120172
Bytes Programmed: 33752
```

8. If you decide to reset the system, please allow several minutes after the download is complete for the system reset to take place. Once the system reset is complete, you will be able to log back into the system.

Upgrading Boot Image Software

Boot Image Software Upgrades to the DNX-1u can be performed quickly and easily using TFTP. Ideally the TFTP software code transfer should be performed locally through a LAN connection; however, it can be completed remotely through a routed IP WAN environment.

Note: *Boot Image Software upload is restricted to the same or newer software version relative to the version currently in use. The system does not allow the upload of older software revisions.*

There are *two* distinct parts of the Boot Image Software Upgrade process. The upgrade file must first be uploaded to the DNX-1u using the TFTP transfer. Then the file must be downloaded from the DNX-1u buffer into non-volatile memory. Procedures for accomplishing a Boot Image Software Upgrade are provided on the next several pages.

Uploading the File Using TFTP

Note: *There are many different types of TFTP applications. For the purpose of this document, general terms are used when describing TFTP entries.*

1. Copy the specified Boot Image software file from the Sycamore Networks website or software CD to the host PC that will be running the TFTP client application.

2. Start the TFTP Client application on the Host PC.

3. Type in the IP address for the DNX-1u in the **Destination, Host**, **FTP Server** or **Target Node** field of the TFTP Client application.

Note: *DNX-1u software files are in binary format and some third-party TFTP applications may be defaulted to another format, such as ASCII, which will corrupt the files and FLASH memory on the module. Check the settings of your TFTP application to ensure that Binary Mode is enabled so that no reformatting will occur when the TFTP transfer takes place.*

4. Enter the Host PC path to the specified boot image upgrade file either by typing it in or by clicking on the **Browse** button and locating the file.

Note: *DO NOT alter the file name or format.*

   The upgraded boot image file is uploaded to the DNX-1u.

5. Click **Send**. The boot image upgrade file is uploaded to the DNX-1u. As a security precaution, the image is stored in dynamic memory at this point, and needs a valid administrator to log into the DNX-1u and download the software into non-volatile memory.

Downloading the Program into DNX-1u Memory

1. Using the TFTP Upload procedure above, send the upgraded system software program to the DNX-1u's IP address.

2. Initiate a Telnet or console session with the DNX-1u and log in.

3. From the DNX-1u Main Menu, select **Utilities** and then on **Download Software**.

   The Software Upgrade Center Menu is displayed with the name of the upgraded system image software file displaying in the *Current Program File* field.

Figure 9-27: *Software Upgrade Center Menu*

```
System ID: DNX-1u No.1                                          Help = [?]
Sycamore Networks, Inc.              DNX-1u
                            Software Upgrade Center
Current Program File: d1u040p.bin
Download Status: Idle
File Size      : 1120212

      Boot Image
      System Image









[L]oad current   [D]elete program file
```

4. Move your cursor to *Boot Image* and press **L** to load the current image.

   A message is displayed asking if you want to send the current program file to the Boot Loader.

Note: *You can reset/not reset the unit after burning new image to flash memory. If the unit is not reset, the online boot image file continues running. The system will not use the new boot image file until the next power-up or reset.*

5. Press **Y** to start downloading the file into DNX-1u memory.

   A message is displayed asking if you would like to reset the boot after downloading.

6. Press **Y** to load the program into memory and reboot the DNX-1u with the new software. Press **N** to load the program into memory, but keep running the existing program. At a later time, the image can be switched.

CAUTION

While the software download occurs in the background, service will be interrupted for several minutes during the system reboot while the system decompresses the software and resets.

7. During the actual download, there will be a delay while the new code is burned into FLASH memory and the system resets. A screen similar to the following is displayed while the download is in process.

8. If you decide to reset the system, please allow several minutes after the download is complete for the system reset to take place. Once the system reset is complete, you will be able to log back into the system.

Firmware Management

System Software Images

The DNX-1u System software files are stored as software images. There are *two* image files that are retained in system memory. These will be the last two system software files that were downloaded. The Image Menu provides two options for managing these system images: the user can view image information to see which system software programs are currently stored in memory or can switch the offline image with the one currently running.

Navigation:
DNX-1u Main Menu ↓ Utilities ↓ Firmware Management

Accessing the Firmware Management Menu

To access the Firmware Management menu, follow the procedure below.

1. From the Utilities Menu select **Firmware Management**.

   The Image Menu is displayed.

Figure 9-28: *Image Menu*

```
System ID: DNX-1u No.1                                          Help = [?]
Sycamore Networks, Inc.            DNX-1u


                              Image Menu



                            Switch Image
                            Image Information
```

2. Refer to the sections below for additional information.

Switching an Image

The Switch Image option is used to switch the offline image with the one currently running.

To switch an image, follow the procedure below.

1. From the Image Menu select **Switch Image**.

   A message is displayed asking if you want to switch the image.

2. Press **Y** to reboot the DNX-1u and reverse the online and offline system software images. The offline image will become the online image and vice versa. Press **N** to abort.

> **CAUTION**
>
> Service will be interrupted for several minutes during the system reboot while the system resets.

Displaying Image Information

This option displays software file name and size for both the online and offline system software that is currently stored in memory.

To display image information, follow the procedure below.

1. From the Image Menu select **Image Information**.

   The Image Information screen is displayed.

Figure 9-29: *Image Information*

```
System ID:                                                          Help = [?]
Sycamore Networks, Inc.              DNX-1u


                                Image Information
Boot Loader
      Boot Loader Version: 01.1

System Software
                  Online Image              Offline Image
      ---------------------------------------------------------------
      File Name.: d1u0400p.bin               d1u035h.bin
      Size......: 1120132                    1100542
      Header
```

Close All Other Telnet Sessions

The Close All Other Telnet Sessions utility can be used by a System Administrator (Admin-level user), which allows the Administrator to close all Telnet sessions with the exception of his or her own. It can be used as a clear command when one or more sessions get hung up, or when an Admin-level user needs to get to a menu when it is “locked up” by another user.

Navigation:
DNX-1u Main Menu ↓ Utilities ↓ Close All Other Telnet Sessions

Closing All Other Telnet Sessions

To close all other Telnet sessions, follow the procedure below.

1. From the Utilities Menu select **Close All Other Telnet Sessions**.

   A message is displayed indicating that all other Telnet sessions were closed.

2. To determine if all other Telnet sessions have actually closed, you need to go to the Events Menu.

3. Press **X** to exit the Utilities Menu and return to the DNX-1u Main Menu.

4. From the DNX-1u Main Menu, select **Events**, **Monitor Events** or **Display Event Log**.

   The System Events Display (Figure 9-30) displays a real time view of the terminated session and the Event Log (Figure 9-31) displays a non-static view of the terminated session.

Figure 9-30: *System Events Display Showing Telnet Session for User "view2" Terminated*

```
System ID: DNX-1u No. 1                                          Help = [?]
Sycamore Networks, Inc.              DNX-1u
                                 System Events

Seq  Time  Date  Source     Event
---  ----  ----  ---------  -------------------------------------------
0033 15:35 07/16 1.SYS      LOGOUT user - view2 (login remains: 0)
0032 15:35 07/16 1.SYS      Telnet: close session 1
0031 15:35 07/16 1.SYS      LOGIN user - view2 (login total: 1)
0030 15:35 07/16 1.SYS      Telnet: open session 1
0029 14:27 07/16 1.SYS      LOGIN user - admin (login total: 1)
0028 14:15 07/16 1.SYS      Clock state is free-run
0027 14:15 07/16 1.CONT     Output Contact 3 Alarm ON!
0026 14:15 07/16 1.CONT     Output Contact 2 Alarm ON!
0025 14:15 07/16 1.CONT     Output Contact 1 Alarm OFF!
0024 14:15 07/16 1.SYS      Subsystem 1.PS-B reporting
0023 14:15 07/16 1.SYS      Subsystem 1.PS-A reporting
0022 14:15 07/16 1.SYS      Subsystem 1.TCODER reporting
0021 14:15 07/16 1.SYS      Subsystem 1.TEMP reporting
0020 14:15 07/16 1.SYS      Subsystem 1.VOLT reporting
0019 14:15 07/16 1.SYS      Subsystem 1.CONT reporting

[C]lear event log               >> indicates Audit Trail Event
```

Figure 9-31: *Event Log Showing Telnet Session for User "view2" Terminated*

```
System ID: DNX-1u No. 1                                          Help = [?]
Sycamore Networks, Inc.              DNX-1u
Seq  Time  Date  Source     Event
---  ----  ----  ---------  ----------------------------------------------------
0033 15:35 07/16 1.SYS      LOGOUT user - view2 (login remains: 0)
0032 15:35 07/16 1.SYS      Telnet: close session 1
0031 15:35 07/16 1.SYS      LOGIN user - view2 (login total: 1)
0030 15:35 07/16 1.SYS      Telnet: open session 1
0029 14:27 07/16 1.SYS      LOGIN user - admin (login total: 1)
0028 14:15 07/16 1.SYS      Clock state is free-run
0027 14:15 07/16 1.CONT     Output Contact 3 Alarm ON!
0026 14:15 07/16 1.CONT     Output Contact 2 Alarm ON!
0025 14:15 07/16 1.CONT     Output Contact 1 Alarm OFF!
0024 14:15 07/16 1.SYS      Subsystem 1.PS-B reporting
0023 14:15 07/16 1.SYS      Subsystem 1.PS-A reporting
0022 14:15 07/16 1.SYS      Subsystem 1.TCODER reporting
0021 14:15 07/16 1.SYS      Subsystem 1.TEMP reporting
0020 14:15 07/16 1.SYS      Subsystem 1.VOLT reporting
0019 14:15 07/16 1.SYS      Subsystem 1.CONT reporting
0018 14:15 07/16 1.SYS      Subsystem 1.ASYN reporting
0017 14:15 07/16 1.SYS      Subsystem 1.SYNC reporting

Event log Filter: Not Active
[R]efresh [N]ext page [P]revious page [L]ast page [F]ilter [C]lear event log
```

Part ID

This display provides Hardware-related information, such as serial numbers, hardware versions, and applicable Engineering Change Notices, for the DNX-1u Base Board (Main Board), Power Supply Modules, and T1/E1 Modules.

Navigation:
DNX-1u Main Menu ↓ Utilities ↓ Part ID

Obtaining Part IDs

To obtain part IDs for the DNX-1u, follow the procedure below.

1. From the Utilities Menu select **Part ID**.

   The Unit Part Identification screen is displayed.

Figure 9-32: *Unit Part Identification Display*

```
System ID: DNX-1u No. 1                                          Help = [?]
Sycamore Networks, Inc.              DNX-1u

                              Unit Part Identification

CLLI: Invalid !

Sub System         Serial #   HW  ECNs
-------------------------------------------------------------------------------
Base Board        0236TH0007  00  1387F
Power Supply A    0236PH0033  00  1387E
Power Supply B    0236PH0034  00  1387E
T1E1 A            0236QH0033  00  00000
T1E1 B            0236QH0034  00  00000
```

Field Descriptions

Table 9-14 provides field descriptions for obtaining part IDs.

Table 9-14: *Unit Part Identification Display Field Descriptions*

Field	Description
CLLI: *(display field)*	Displays the Common Language Location Identification (CLLI) code, which is an 11-digit code that is used to identify switches, points of interconnection, and other categories of telephony network elements and their locations. All CLLI codes are stored in a national database maintained by Telcordia.
Sub System: *(display field)*	Displays the subsystem for which the identification information is being displayed.
Serial #: *(display field)*	Displays the serial number of the effected subsystem.
HW: *(display field)*	Displays the Hardware Revision level of the effected subsystem.
ECNs: *(display field)*	Displays the tracking number for any Engineering Change Notices (ECN) that have disseminated changes that have been performed on the effected subsystem.

Appendix A
Regulatory Information

North America

The DNX-1u Access Gateway complies with the requirements of Part 15 of FCC Rules for a Class A computing device. Operation of this equipment in a residential area may cause unacceptable interference to radio and television reception, requiring the operator to take whatever steps are necessary to correct the interference.

Shielded cables should be used with this unit to ensure compliance with the Class A limits. The drain wire must be attached to one of the two ground lugs available on the rear bezel. The drain wire connection must be kept as short as possible.

This Class A digital apparatus meets all requirements of the Canadian Interference Causing Equipment Regulations.

ACTA Requirements For Consumer Products

This equipment complies with Administrative Council for Terminal Attachments (ACTA) rules, IS-968. On the bottom side of this equipment is a label that contains, among other information, the ACTA Certification Number for this equipment. If requested, provide this information to your telephone company.

Connection Type: RJ48C

Service Order Code(s) 6.0N

Facility Interface Code(s) 04DU9-BN, DN, -1KN, -1SN

If this equipment causes harm to the telephone network, the Telephone Company may discontinue your service temporarily. If possible, they will notify you in advance. But if advance notice isn't practical, you will be notified as soon as possible. You will be advised of your right to file a complaint with the FCC.

Your telephone company may make changes in its facilities, equipment, operations, or procedures that could affect the proper operation of your equipment. If they do, you will be given advance notice so as to give you an opportunity to maintain uninterrupted service.

If you experience trouble with this equipment contact Sycamore Networks Customer Service at 856-273-6622 for warranty/repair information. The telephone company may ask that you disconnect this equipment from the network until the problem is corrected or until you are sure that the equipment is not malfunctioning.

Industry Canada Statement

NOTICE: This equipment meets the applicable Industry Canada Terminal Equipment Technical Specifications. This is confirmed by the registration number. The abbreviation, IC, before the registration number signifies that registration was performed based on a Declaration of Conformity indicating that Industry Canada technical specifications were met. It does not imply that Industry Canada Approved the equipment.

AVIS: Le présent matériel est conforme aux spécifications techniques d'Industrie Canada applicables au matériel terminal. Cette conformité est confirmée par le numéro d'enregistrement. Le sigle IC, placé devant le numéro d'enregistrement, signifie que l'enregistrement s'est effectué conformément à une déclaration de conformité et indique que les spécifications techniques d'Industrie Canada ont été respectées. Il n'implique pas qu'Industrie Canada a approuvé le matériel.

Product Safety

This equipment meets the safety requirements of CAN/CSA C22.2 No. 60950-1-07 and ANSI/UL 60950-1, 2nd Ed.

CAUTION

The DNX-1u must be installed by qualified personnel only in a restricted access location in accordance with applicable local and national regulations (for example, CEC in Canada, or NEC in the U.S.) where:

- Entry is only for the trained personnel; and
- Entry can be accessed only through the use of a special tool or lock and key, or other means of security, and is controlled by the authority.

No user serviceable fuse used.

WARNING

To reduce the risk of fire, use only No. 26 AWG or larger telecommunication line cord.

WARNING

The unit is intended to be rack mounted in accordance with manufacturer’s instruction.

Europe

This equipment is in conformity with the following standard(s) or other normative document(s):

EN 55022

EN 300 386-2

EN 60950

IEC 60950

ETSI TBR 12, TBR 12/A1, TBR 13

Waste Electrical and Electronic Equipment Directive (WEEE)

PRODUCT RECYCLING AND DISPOSAL

This product is not intended to be used in private households.

Do not discard this product in public waste facilities. European Union Directive 2002/96/EC requires the recycling of this product at the end of its useful life.

This product contains materials such as circuit boards which may contain lead and other materials that require special handling. It also may contain components such as batteries. Before this unit is disposed of, these materials must be recycled or discarded according to regional regulations.

Please contact your regional sales office if you need assistance.

Taiwan

Battery Recycling and Disposal

Australia

ACA AS/NZ 3548:1995

AS/NZS 3260:1993

ACA TS 016-1997

Section 10
About

Introduction

The About Menu allows you to display software and hardware release information and user information. It also allows access to the Feature Keys Menu, from which you can enable specific feature options for the DNX-1u.

About Menu

The About Menu allows you obtain information on system profile, your user ID and Feature Key information.

Navigation:
DNX-1u Main Menu ↓ About

Accessing About Information

1. From the DNX-1u Main Menu, click on **About**.

   The About Menu is displayed.

Figure 10-1: *About Menu*

```
System ID: DNX-1u No. 1                                        Help = [?]
Sycamore Networks, Inc.              DNX-1u


                                   About Menu



                                System Profile
                                Who Am I
                                Feature Keys
```

From this menu you can access system profile and user information, and Feature Key information.

System Profile

The System Profile displays the version, release date, and checksum information for DNX-1u System Software.

Navigation:
DNX-1u Main Menu ↓ About ↓ System Profile

Viewing the System Profile

To view the system profile, follow the procedure below.

1. From the About Menu select **System Profile**.

   The System Profile information is displayed.

Figure 10-2: *System Profile Information*

```
System ID:                                                          Help = [?]
Sycamore Networks, Inc.              DNX-1u
121 Whittendale Drive
Moorestown, NJ 08057
Tel - 800.337.4374
FAX - 856.273.1847

                              DNX-1u
                    ----------------------------------------
                    Version.......................: 4.0p
                    Release Date..................: April 10, 2007
                    Calculated Checksum...........: 0X22AA
```

The System Profile Menu is a read-only screen. Refer to *Field Descriptions* for more information on these fields.

Field Descriptions

Table 10-1 lists the field descriptions for System Profile information.

Table 10-1: *System Profile Menu Field Descriptions*

Field	Description
Version: *(display field)*	Displays the software version currently residing in the system's flash memory.
Release Date: *(display field)*	Displays the date of system software release.
Calculated Checksum: *(display field)*	Displays the sum of all bytes in the system's flash memory at power up. Also used to identify software version.

Who Am I

The Who Am I Menu shows the name, security level, and security mask for the current user session that is logged into the system.

Navigation:
DNX-1u Main Menu ↓ About ↓ Who Am I

Viewing Current User Information

To view current user information, follow the procedure below.

1. From the About Menu select **Who am I**.

   The Who Am I screen is displayed.

2. Type in your password and press **Enter** to access user information.

   The Who Am I screen is displayed with specific user information.

Figure 10-3: *Who Am I Display*

```
System ID: DNX-1u No. 1                                          Help = [?]
Sycamore Networks, Inc.              DNX-1u


                                    Who Am I
                                    --------



                          Name............: DefaultUser
                          Security level..: Administration
                          Security mask...: f00f0f
```

Feature Keys

The software functionality of the DNX-1u is divided into a collection of core (standard) and optional feature sets. Each feature set contains a set of closely related software. This allows the customer to purchase only the functionality that is needed for a specific application, and also provides the flexibility to activate more functionality at a later date as application requirements change. These feature sets are activated by the entering feature option key character strings into the system. These keys are entered using the Feature Keys Menu.

Navigation:
DNX-1u Main Menu ↓ About ↓ Feature Keys

Accessing Feature Key Information

To access Feature Key information, follow the procedure below.

1. From the About Menu select **Feature Keys**.

   The Feature Keys screen is displayed.

Figure 10-4: *Feature Keys Menu*

```
System ID:                                                          Help = [?]
Sycamore Networks, Inc.              DNX-1u

                                  Feature Keys


 Customer ID: 0                        Demo Time To Go Days: 0    Hours: 0

 ADPCM Tcoder           Active
 Subrate Switching      Active
 Monitor and Control    Active
 Basic Routing          Active
 Advanced Routing       Active
 High Availability      Inactive
 APS                    Active
 Enhanced T1/CSU        Inactive
 Enhanced Management    Key Needed





   [K]ey      [D]elete Key
```

Note: *High Availability, APS, and Enhanced T1/CSU are mutually exclusive and cannot be active at the same time.*

Feature Option Keys

Note: *The Feature Option Key number is serial number and/or customer dependent. A Feature Option Key will only function for a specific customer with a unit that has the corresponding serial number.*

The *Feature Option Key* number is provided on a two-part label (see Figure 10-5) attached to the outside of the DNX-1u shipping box. The key number is serial number and/or customer dependent. In order to keep the key number with the unit it applies to, it is recommend that the top half of the sticker containing the key number be removed from the box and affixed to the inside of the DNX-1u module panel cover. This will allow it to remain with the affected unit and make it easily accessible in the future.

Figure 10-5: *Feature Option Key Label*

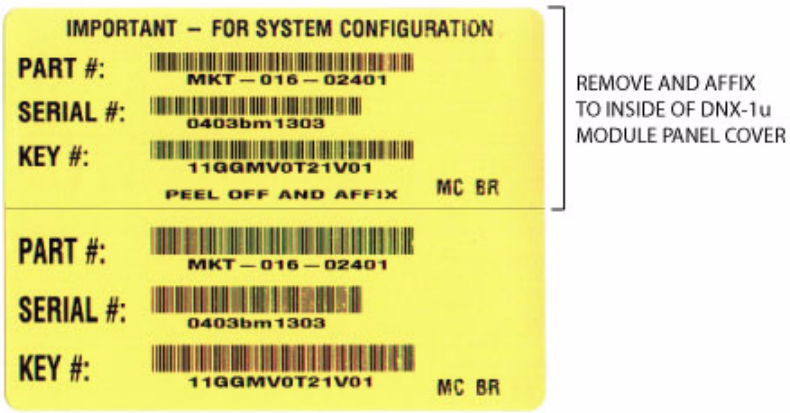

In the lower right-hand corner of the label, two-letter feature option identification codes are provided to indicate the feature options associated with the unit's feature option key. These codes are described in Table 10-2.

Feature Option Codes

Table 10-1 lists the Feature Option codes for the DNX-1u.

Table 10-2: *Feature Option Identification Codes*

Code	Feature Option Key
AI	All Inclusive
AP	T1/E1 APS: *1+1 Automatic Protection Switching* and *1:1 Automatic Protection Switching.*
AR	Advanced Routing: *Open Shortest Path First (OSPF)*.
BR	*Basic Routing: Terminal Server (ASYNC), XOT, PPP, Channelized Routing, RIP, NAT, DHCP, Packet Filtering and 24/32 DS0 Clear T1/E1 Routing.*
EC	Enhanced T1 Channel Service Unit (CSU) operation with configurable alarming.
EM	Enhanced Management: *TACACS+* (current) or *RADIUS* access (future).
HA	High Availability Circuits (HAC): *T1 1+1 Circuit Protection Groups*
MC	Monitor and Control: *Low Speed Asynchronous Data*, *Input/Output Contact Closures*, *Voltage Measurement*, and *Ambient Temperature Measurement Subsystems.*
SS	Subrate Switching: *High* and *Low* Nibble (4-bit) connections.
TC	ADPCM Transcoder: Transcoder Subsystem. ***Note:*** *Only supported on models that contain the necessary Transcoder hardware.*

Activating Feature Options

Note: *Prior to performing this action, ensure that you have the Feature Option Key number present. This will be attached to the outside of the DNX-1u packaging, or to the unit itself. A Feature Option Key must be purchased that will activate your chosen feature options. If you do not have the required key, contact Sycamore Networks Customer Support for information.*

To activate a feature option, follow the procedure below.

1. From the Feature Keys screen, press **K**.

   The Feature Key entry screen is displayed.

Figure 10-6: *Feature Key Entry Menu*

```
System ID: default name Unit #1                                    Help = [?]
Sycamore Networks, Inc.              DNX-1u




 Enter Feature Key
```

Note: *High Availability, APS, and Enhanced T1/CSU are mutually exclusive and cannot be active at the same time.*

2. Press **Enter**.

   The cursor is displayed on an empty line.

3. Type in the software key number (found on the label contained in the DNX-1u packaging) exactly as written and then press **Enter** to store.

Note: *The Feature Option Key number is serial number and/or customer dependent. A key number will only function for a specific customer with a unit that has the corresponding serial number.*

4. Press **X** to exit and activate all of the selected options.

   You are returned to the Feature Keys Menu.

5. Verify the word *Active* is now displayed next to your specific options.
6. If this is correct, press **X** to exit and save changes.

   A message is displayed asking if you want to update the configuration.

7. Press **Y**.

   You are returned to the About Menu.

De-Activating Feature Options

As application requirements change, you may decide to de-activate or delete a Feature Key option in order to activate another option. You can also de-activate an option in order to perform necessary testing. The feature sets are de-activated by using the Feature Keys Menu.

To de-activate a feature option, follow the procedure below.

1. From the Feature Keys screen move your cursor to the option you want to de-activate and press **D**. Press **Enter**. The following message is displayed.

   A message is displayed asking if you want to update the configuration.

Note: *High Availability, APS, and Enhanced T1/CSU are mutually exclusive and cannot be active at the same time.*

2. Move your cursor to the option you want to de-activate and press **D**.

   The feature option you selected to remove will now display as Need Key.

3. Press **Enter** to continue or if you make a mistake press **Esc** to abort this change.

   A message is displayed asking if you want to update the configuration.

4. Press **Y**.

   You are returned to the About Menu.

5. Press **Y** to update the configuration and delete the Feature Option Key.

   A message is displayed indicating that this change could involve a change to the connection maps.

6. Press **Y** to continue.

   A message is displayed indicating this will change the default configurations and reset the system.

7. Press **Y**.

   A message is displayed asking if you want to preserve IP information.

8. Press **Y**.

   The system IP configuration will be preserved and the system will be reset. If you were accessing the system remotely, a management connection will need to be re-established.

Upgrading Software and Feature Keys

When upgrading/switching the DNX-1u software version to a different release, it is possible under certain conditions to have two mutually exclusive Feature Options Keys enabled at the same time. In this case, the earlier software version is not aware of the new Feature Option Key and as a result will not display a warning message about conflicting keys. If a newer Feature Option Key is already enabled and an older, mutually exclusive key is automatically enabled again once the older software version is loaded, the system will not display a warning message. However, each Feature Option Key is enabled only for the release currently loaded on the system and will not be activated with any keys activated upon loading a different software version on the system.

If one of these conditions occurs, the system will generate one of the following events in the System Event Log:

‘Keys Error: APS and T1/CSU both active’, or

‘Keys Error: High Availability and APS both active’, or

‘Keys Error: High Availability and T1/CSU both active’

In order to correct this problem, the user must disable the Feature Option Key that is not supported by the active software version.

THIS PAGE INTENTIONALLY LEFT BLANK.

Appendix B
Router Subsystem Command Line Interface

This appendix describes the Router Subsystem Command Line Interface (CLI), an alternate method to access the DNX-1u's internal router. Included in this appendix is a general description of the CLI, CLI modes of operation, and a table of all CLI command syntax, definitions of all arguments, and references to the equivalent console menu command.

The DNX-1u Router CLI is essentially a subset of the Cisco® CLI. Some commands have been dropped, and some variations have been built in to optimize DNX-1u Router performance. A few DNX-1u Router CLI commands are not supported in the Cisco CLI. All variations are noted in this appendix.

User Access

The administrator assigns the method of access; for example, using console menus or CLI, to each user using the "Shell Type" parameter in the User Configuration Menu (Table 4-1 on page 4-4). Users with CLI access can use either the CLI or the menus. Users with menu access cannot use the CLI.

WARNING

Exercise caution when entering or editing user information as the system will allow you to overwrite existing user information without generating a warning message.

Special Notes

The ASCII configuration file (flat file) can not be copied from the system unless the user is in Global Configuration Mode.

If a configuration menu is locked by another user, when you try to change a related configuration from CLI the following error message is displayed:

```
Command aborted. Configuration is locked by another user.
```

If CLI commands are entered when in a particular mode and they are not accepted (mode error), the following error message is displayed:

```
Command aborted. CLI is not enabled: CLI must be enabled at User EXEC
before taking any commands.
```

CLI Viewer and CLI Testers can view a specific configuration; however, they do not have write access. If this type of user tries to change a configuration, the following error message is displayed:

```
Command aborted. User has no write access.
```

Hardware Connection

The CLI is accessible using a Telnet or Craft port.

Modes of Operation

All CLI commands are grouped into *five* modes of operation: User EXEC, Privileged EXEC, Global Configuration, Interface Configuration, and DHCP Configuration. Figure B–1 illustrates these modes, as well as the navigation commands that move the user between modes.

Figure B–1 *CLI Modes of Operation and Inter-Mode Navigation Commands (blue)*

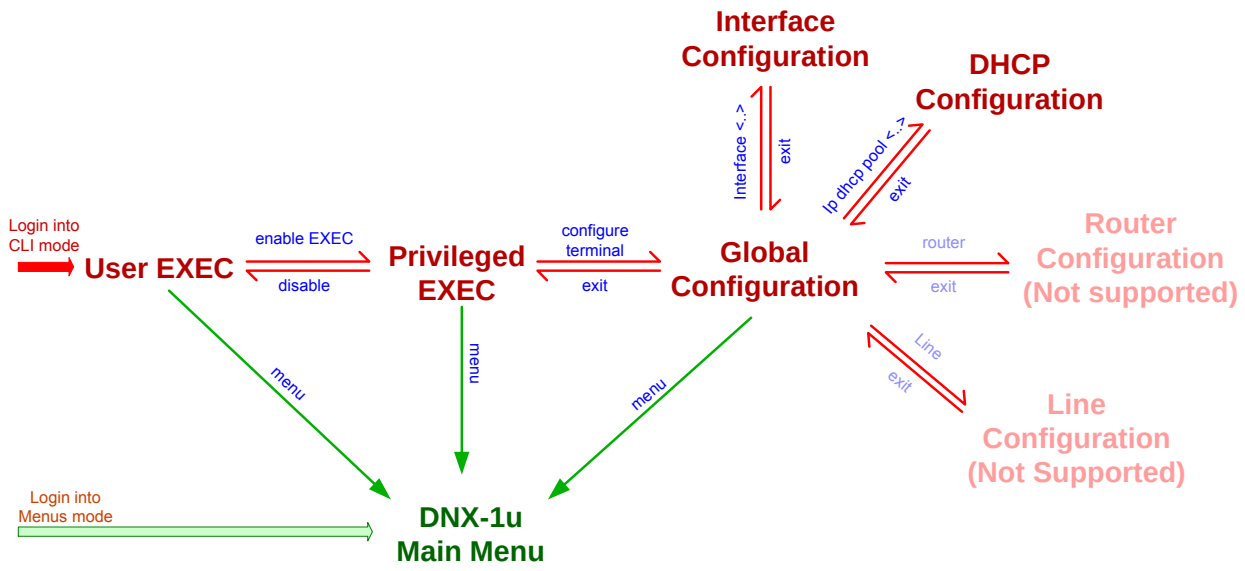

Getting Around the DNX-1u

This section provides a quick reference to move through the various user modes in the DNX-1u.

- When you first login, you are in the EXEC mode.
- To move to the next mode, Privileged EXEC Mode, enter the command **enable**.
- To move to the next mode, Global Configuration Mode, enter the command **configure terminal**.
  - To move to the Interface Configuration Mode, enter the command **interface wan <number>**.
  - To move to the DHCP Mode, enter the command **ip dhcp pool**.
- To move back one level, enter the command **exit**. Once you have reached the Privileged EXEC mode, typing **disable** at this level will move you to the EXEC Mode.
- To log out of the DNX-1u from the EXEC Mode enter the command **exit**.

Usage

When using the CLI, refer to the usage guidelines below.

Quotes

Strings must be enclosed by double quotes to avoid ambiguity with command words. For example, **username "myrouter"**; not **username myrouter**.

Argument, String, Address Entry Rules

All the same argument, string length, and IP address rules apply for both CLI and menu access. All IP addresses, including individual, subnet, and gateway, must be specified in dotted-decimal notation.

“No” Commands

Many CLI commands can be negated by using the prefix **no**_ (that is, “no” followed by a space). This usually has the effect of deleting something or returning to a default value. If preceded by **no**, the configuration commands that set a particular value will reset that same value. The **no** prefix will set the defined value(s) to defaults for the configuration commands that define new value(s) in the menus. For example, the command **no username** returns the unit name to the default setting (blank).

Note: *For most cases, the **no** prefix must be followed by the non-variable part of the command only (no arguments). Exceptions are: **access-list** and **interface** commands.*

The command tables in this appendix list the relevant **no** command and its result following each parent command entry. Some **no** commands do not have a Cisco counterpart. This will be noted in the command syntax tables that follow.

Help Commands

Entering a **?** or **help** lists all the commands available for the currently invoked mode. Entering a particular command followed by or preceded by a **?** displays the syntax for that command. In addition, you can also enter **help** followed by the command name or the command name followed by **help**.

Saving to the Database

Unlike the Cisco CLI, which requires a manual entry to save each configuration change, the DNX-1u CLI saves modified information immediately (except for DHCP configuration entries).

Command Syntax

The information under the headings that follow describe the DNX-1u Router CLI command syntax for all commands, organized first by mode, and then alphabetically within each table.

Entering Partial Commands

You can enter partial CLI commands and then press the **Tab** key to display the rest of the command.

Note: *A sufficient number of characters must be entered in order to uniquely identify that command.*

User EXEC Mode

If the user is set for CLI access; for example Shell Type parameter; Table 4-13 on page 4-37, this mode is invoked when login first occurs. This mode displays the prompt [***username]*** ***%***][1]**>**. Table B-1 lists the commands that are available in the User EXEC Mode.

Table B-1: *User EXEC Mode Commands*

Syntax	Description	Equivalent DNX-1u Console Command
`enable`	**Navigation command** that moves the user from the User EXEC Mode to the Privileged EXEC Mode (Figure B–1 on page B-2).	(not applicable)
`exit`	Logs the user out of the CLI.	*X* (from Main Menu) *
`menu`	**Navigation command** that moves the user from the EXEC Mode to the DNX-1u console menus (Figure B–1 on page B-2). The Main Menu is displayed.*	Menu login
* Entering **X** from the keyboard in response to the Main Menu returns the user to the CLI, if the user is set for CLI access (Table 4-13 on page 4-37). If the user set is set for Menu access, the **X** entry from the Main Menu simply logs the user out.		

1. The name assigned to the unit by the user from the username command (Table B-3 starting on page B-6) displays in place of ***hostname*** between the brackets [ ].

Privileged EXEC Mode

Table B-2 lists the commands that are available in the Privileged EXEC Mode. These commands display the router properties and configuration, as well as clear dynamic, such as RAM-stored tables, and the navigation commands. The prompt in this mode is **hostname#**.

Note: *These commands will not store any status in the configuration database.*

Table B-2: *Privileged EXEC Mode Commands*

Syntax	Description	Equivalent DNX-1u Console Command
`configure terminal`	**Navigation command** that moves the user from the Privileged EXEC Mode to the Global Configuration Mode (Figure B–1 on page B-2).	(not applicable)
`disable`	**Navigation command** that moves the user from Privileged EXEC Mode back to the User EXEC Mode.	(not applicable)
`menu`	**Navigation command** that moves the user from the Privileged EXEC Mode to the DNX-1u console menus (Figure B–1 on page B-2). The Main Menu is displayed. ***Note:****Entering **X** from the keyboard in response to the Main Menu returns the user to the CLI, if the user is set for CLI access (Table 4-13 on page 4-37).*	Menu login
`show arp`	Dumps the contents of the ARP table.	*Main Menu>* *Utilities>* *Router >* *ARP Table*
`show config`	In Privilege EXEC Mode or Global Configuration Mode, this command displays the entire configuration of the entire unit. In the Interface Configuration Mode, the configuration of that interface is displayed. The information will be in the form of implemented CLI commands that place the unit/router into the current configuration. The configurations that are not implemented using CLI commands and can only be done through console menus are not displayed in the DHCP Configuration Mode. This command displays entire configuration for DHCP Mode.	No equivalent menu command.
`show ip route`	Displays the contents of the routing table. ***Note:****A route table must be set up before an IP route can be displayed.*	*Main Menu >* *Utilities >* *Router >* *IP Route Table >* *Dump IP Route Table* (Table 9-3 on page 9-11)
`clear arp-cache`	Deletes all entries from the dynamic ARP cache.	*Main Menu >* *Utilities >* *Router >* *ARP Table >* *Clear ARP Table* (Table 9-4 on page 9-12)

Global Configuration Mode Commands

Table B-3 lists the commands that are available in the Global Configuration Mode (Table B-3). These commands allow you to make configuration changes to the DNX-1u system. The information changed is immediately saved in non-volatile memory (Flash). Two sub-configuration Modes, DHCP Configuration Mode and Interface Configuration Mode, can be accessed from this mode. The Global Configuration Mode's command prompt is **hostname (config)#**.

Note: *The ASCII configuration file (flat file) can only be copied from the system in the Global Configuration Mode.*

Table B-3: *Global Configuration Mode Commands*

Syntax	Description	Equivalent DNX-1u Console Command
portid <string>	Provides additional information about selected DNX-1u interfaces and allows users to associate a name "string" with each interface for customer tracking purposes. The string name can be up to 19 ASCII characters. For example, "Boston" for WAN 1.	*Main Menu > Configuration > Subsystem Profile > Router > WAN> WAN Interface*
ip nat<first local> <local mask><local range><first global><global mask> <global <static|dynamic|over-loaded> **"No"** prefix: **no ip nat <1-36>** **access-list <100-199> <permit|deny|denylog> <in|out|inout> <icmp|tcp|udp|ospf|0-255> <TCP bits> <source addr> <source mask> <source comparator> <source port> <dest addr> <dest mask> <dest comparator> <dest port>**	Configures a local address range for NAT. The last argument defines whether the NAT entry is Static, Dynamic or OVERLOADED. Only the first 36 entries are applicable. Automatically configures a number of NAT entries with incremented IP addresses incremented for each entry. ***Note:****Unlike the Cisco CLI, this command defines the global addresses and the global mask.* Removes the NAT entry <1-36>. **Full Command Syntax** Adds a filter, which sets up each rule for the IP packet filters. Multiple rules can be added to the same access-list by choosing the same access-list number, and committing the command again with a different rule. It will be added to the same filter as an additional rule lower down in the priority. The filtering rules are applied in the order of definition. For example, defined first/applied first. ***Note:****This command is more robust than Cisco's. For example, the Cisco CLI does not define the traffic direction.* Parameters: • <100-199> - Filter Name string. Only 32 filters in total can be defined. • <permit|deny> - corresponds to block or pass. ***Note:****The permit and deny function does not apply to NAT.* • <in|out|in-out> - direction. in-out can only be associated with permit. • Access Protocol: <na | ospf | icmp | tcp | udp | number 0-255>	*Main Menu > Configuration > Subsystem Profile > Router > IP > Network Address Translation.* (page 5-58)

Table B-3: *Global Configuration Mode Commands (Continued)*

Syntax	Description	Equivalent DNX-1u Console Command
Continued... **access-list <100-199> <permit|deny|denylog> <in|out|inout> <icmp|tcp|udp|ospf|0-255> <TCP bits> <source addr> <source mask> <source comparator> <source port> <dest addr> <dest mask> <dest comparator> <dest port>** **"No"** prefix: **no access-list <100-199>**	***Note:****Above, "na" stands for not applicable.* • Source and Destination Comparator values: <na | lt | le | gt | ge | eq | neq> • [log|syslogd] - can only be selected if deny is selected, to correspond to block&log or block&syslogd entries in "Reaction" field. • TCP bits values: <na | fin | syn | rst | psh | ack | urg> **Minimum Comand Syntax** **access-list <100-199> <permit|deny|deny-log> <in|out|inout> <source addr> <source mask> <dest addr> <dest mask> <dest comparator> <dest port>** Removes the access-list <100-199>. The corresponding Filter is removed.	*Main Menu* > Configuration > *Subsystem Profile* > *Router* > *IP* > *Filters* > *Single Filter Config* > *[A]dd a Filter* (page 5-52)
exit	**Navigation command** that moves the user from the Global Configuration Mode back to the Privileged EXEC Mode. At the lowest level (User EXEC Mode) this command will log the user out).	*X* (from Main Menu) (See * in Table B-1 on page B-4.)
hostname "<string>" **"No"** prefix:	Names the unit. Sets the Unit Name to default (blank).	*Main Menu* > *Configuration* > *Unit Profile* (page 4-3)
interface logical <number 1,8-21> **"No"** prefix: **no interface <logical1|logical8|logical9|..... |logical21>**	**Navigation command** that selects the logical ports, and then moves the user from the Global Configuration Mode to the Interface Configuration Mode. Logical ports 2 through 7 are pre-assigned to the ASYNC ports, and cannot be configured using the CLI. Logical port 8 and higher can be associated with the 14 WAN ports. Disassociates the Logical interface with the previously associated WAN interface; no corresponding command in the Cisco CLI.	(not applicable)
interface wan <number 1-14> **"No"** prefix: **no interface<wan1|WAN1|wan2|WAN2|... |wan14|WAN14>**	**Navigation command** that selects one of the 14 virtual WAN ports, and then moves the user from the Global Configuration Mode to the Interface Configuration Mode. Disassociates the WAN interface with the previously associated timeslot; no corresponding command in the Cisco CLI.	(not applicable)

Table B-3: *Global Configuration Mode Commands (Continued)*

Syntax	Description	Equivalent DNX-1u Console Command
`ip dhcp pool "<name>"` **"No"** prefix:	**Navigation command** that selects the name for the DHCP pool, and then moves the user from the Global Configuration Mode to the DHCP Configuration Mode. The <name> field corresponds to the Network Name, which is different in the Cisco CLI. Deletes the Network Name.	*Main Menu > Configuration > Subsystem Profile > Router > DHCP Server > DHCP Dynamic Configuration.* Enter on a particular network (pool).(page 5-101)
`ip dhcp-server` **"No"** prefix:	Enables the integrated DHCP server. Disables the DHCP Server.	*Main Menu > Configuration > Subsystem Profile > Router > DHCP Server > DHCP Options* (page 5-112)
`ip route <destination><mask><next hop><hop count>` **"No"** prefix: **`no ip route <destination>`**	Adds a route to the route table. The route with the <destination> address is chosen. If not defined, then the next empty route entry is chosen. The arguments in the command correspond to Destination Address, Mask, Next Hop and Number of Hops entries on the menu. Deletes the IP route with the given destination address.	*Main Menu > Configuration > Subsystem Profile > Router > IP > Route Table Config.* Enter on a route (page 5-42)
`menu`	**Navigation command** that moves the user from the Global Configuration Mode to the DNX-1u console menus (Figure B–1 on page B-2). The Main Menu is displayed. ***Note:*** *Entering **X** from the keyboard in response to the Main Menu returns the user to the CLI, if the user is set for CLI access.*	Menu login
`snmp-server community "<name>" <ro|rw><1-4>` **"No"** prefix: **`no snmp-server <ro|rw><1-4>`**	Sets the Read Only Community Profile or Read/ Write Community Profile (<ro|rw> field) for the specified SNMP community. For example, string number 1 to 4 depending upon the previous argument) for the string defined in the argument "<name>". ***Note:*** *Unlike the Cisco CLI, the last argument defined is the community string number, rather than the access-list.* Resets the community string associated with read or write string #1 to #4.	*Main Menu > Configuration > SNMP Agent Config. > [C]lients Profile Menu* (page 4-33)
`snmp-server chassis-id "<name>"` **"No"** prefix:	Sets the name variable for the MIB-II system group. The <name> field is the System Name. Clears the System Name above.	*Main Menu > Configuration > SNMP Agent Configuration* (page 4-30)

Table B-3: *Global Configuration Mode Commands (Continued)*

Syntax	Description	Equivalent DNX-1u Console Command
`snmp-server contact "<string>"` **"No"** prefix:	Sets the contact variable for the MIB-II system group. <string> - System contact Clears the SNMP system contact.	*Main Menu > Configuration > SNMP Agent Configuration* (page 4-30)
`snmp-server enable traps` **"No"** prefix:	Enables the automatic sending of unsolicited SNMP status messages. Entry Traps set to Disable.	*Main Menu > Configuration > SNMP Agent Configuration* (page 4-30)
`snmp-server enable traps snmp` **"No"** prefix:	Enables the automatic sending of traps for failed SNMP authorization. Entry Traps set to Disable.	*Main Menu > Configuration > SNMP Agent Configuration* (page 4-30)
`snmp-server host <ip addr> traps` **"No"** prefix:	Adds an IP address to traps that will be sent. Clears the appended addresses.	*Main Menu > Configuration > SNMP Agent Configuration* (page 4-30)
`snmp-server location "<string>"` **"No"** prefix:	Sets the location variable for the MIB-II system group. <string> - System Location. Clears the System Location.	*Main Menu > Configuration > SNMP Agent Configuration* (page 4-30)
`username "<name>" password "<password>" "<Audit ID (three characters)>" <cli|menu> <view|test|provis|admin>` **"No"** prefix: **`no username "<name>"`**	Adds user to the system with the specified parameters. When you enter show username, the system will display all the user profiles in the system. Deletes the user profile.	*Main Menu > Configuration > Users Profile* (page 4-35)

Interface Configuration Mode Commands

Table B-4 lists the commands that are available in the Interface Configuration Mode. This mode executes interface-specific set and get commands for the LAN, WAN(s) and logical interfaces. This mode can only be entered from Global Configuration mode (Figure B–1 on page B-2). The Interface Configuration Mode's command prompt is [***username***](config-[***ifname***])#, where **ifname** is the interface name (See footnote on page B-4.)

Note: *In order to configure logical ports, IP addresses, and Routing Information Protocol (RIP) using CLI commands. The IP protocol must be enabled first.*

Table B-4: *Interface Configuration Mode Commands*

Syntax	Description	Equivalent DNX-1u Console Command
`encapsulation <ppp|mppp|xot| frame-relay>` **"No"** prefix:	Selects the layer 2 protocol for the currently selected WAN interface (one of 14). If in WAN Interface Configuration Mode, sets the Encapsulation Mode to default (ppp).	*Main Menu >* *Configuration >* *Subsystem Profile >* *Router >* *WAN >* *[C]onfigure Interface* (page 5-23)
`exit`	**Navigation command** that moves the user from the Interface Configuration Mode back to the Global Configuration Mode and from the Global Configuration Mode back to the Privileged EXEC Mode. At the lowest level (User EXEC Mode) this command will log the user out).	(not applicable)
`rip` **"No"** prefix:	Enables RIP for the currently selected logical port. Disables the IP RIP.	*Main Menu >* *Configuration >* *Subsystem Profile >* *Router >* *Logical Port Summary.* Select port (page 5-33)
`addr <ip address>`	Assigns an IP address to the logical port. The logical ports that can be selected are #1 and #8-#21. Logical ports #2-#7 are reserved for ASYNC ports and do not use an IP. Logical port #1 corresponds to the internal Ethernet port, and #8-#21 to the 14 WAN ports.	*Main Menu >* *Configuration >* *Subsystem Profile >* *Router >* *Logical Port Summary >*
`ip` **"No"** prefix:	Assigns an IP address. Disables the IP address.	*Main Menu >* *Configuration >* *Subsystem Profile >* *Router >* *Logical Port Summary >*

Table B-4: *Interface Configuration Mode Commands (Continued)*

Syntax	Description	Equivalent DNX-1u Console Command
`mask <ip address>`	Assigns an IP mask address to the logical port. The logical ports that can be selected are #1 and #8-#21. Logical ports #2-#7 are reserved for ASYNC ports and do not use an IP. Logical port #1 corresponds to the internal Ethernet port, and #8-#21 to the 14 WAN ports.	*Main Menu >* *Configuration >* *Subsystem Profile >* *Router >* *Logical Port Summary >*
`remote <ip address>`	Assigns a remote IP address to the logical port. The logical ports that can be selected are #1 and #8-#21. Logical ports #2-#7 are reserved for ASYNC ports and do not use an IP address. Logical port #1 corresponds to the internal Ethernet port, and #8-#21 to the 14 WAN ports.	*Main Menu >* *Configuration >* *Subsystem Profile >* *Router >* *Logical Port Summary >*
`type`	Assigns a WAN port to the logical port. Options are wan 1-14. The logical ports that can be selected are #1 and #8-#21. Logical ports #2-#7 are reserved for ASYNC ports and do not use an IP address. Logical port #1 corresponds to the internal Ethernet port, and #8-#21 to the 14 WAN ports.	*Main Menu >* *Configuration >* *Subsystem Profile >* *Router >* *Logical Port Summary >*
`show string`	Displays WAN port ID configuration.	Although there is no direct console equivalent, you can obtain the WAN and port ID using the following: *Main Menu >* *Configuration >* *Subsystem Profile >* *Router >* *WAN >* *WAN Virtual Port Configuration (Port ID)*
`shutdown` **"No"** prefix:	Shuts down the interface. Only applicable to the 14 available WAN interfaces. Corresponds to the Enabled field set to the value Disabled. Corresponds to the Enabled field set to the value Enabled.	*Main Menu >* *Configuration >* *Subsystem Profile >* *Router >* *WAN >* *[C]onfigure Interface* (page 5-23)
`speed <nx56|nx64 |8k|16k>` **"No"** prefix:	Sets the speed (in kbps) of the selected WAN interface in bits per second. The default is nx56. Sets the speed to default (nx56).	*Main Menu >* *Configuration >* *Subsystem Profile >* *Router >* *WAN >* *[C]onfigure Interface* (page 5-23)

Table B-4: *Interface Configuration Mode Commands (Continued)*

Syntax	Description	Equivalent DNX-1u Console Command
`portid <string>` **"No"** prefix:	Assigns a name to any of the 14 WAN interfaces, up to 19 alphanumeric characters. Removes the port name for any of the 14 WAN interfaces.	*Main Menu >* *Configuration >* *Subsystem Profile >* *Router >* *WAN >* *WAN Virtual Port Configuration (Port ID)*
`use access-list <100-199>` **"No"** prefix:	Selects one of the 100 access-lists as a filter for the selected logical interface. Disassociates the logical port from the filter.	*Main Menu >* *Configuration >* *Subsystem Profile >* *Router >* *WAN >* *[C]onfigure Interface* (page 5-23)

DHCP Configuration Mode Commands

The DHCP Configuration Mode, which can only be entered from Global Configuration Mode (Figure B–1 on page B-2), includes commands that configure the DHCP server and the DHCP address pool (Table B-5). The command prompt in this mode is [***username***](config-dhcp). (See footnote on page B-4.)

Note: *In order for changes to be saved, you must **exit** from the DHCP Configuration Mode. This will move you back to the Global Configuration Mode.*

Table B-5: *DHCP Configuration Mode Commands*

Syntax	Description	Equivalent DNX-1u Console Command
`default-router <ip address>` **"No"** prefix:	Sets the default gateway given by the DHCP server. <ip address> - Gateway IP Address. Sets the gateway IP address back to 0.0.0.0 (default).	*Main Menu >* *Configuration >* *Subsystem Profile >* *Router >* *DHCP Server >* *DHCP Dynamic Configuration.* Enter on a particular network (pool). (page 5-101)
`dns-server <first_address> <second_address>` **"No"** prefix:	Sets the primary and secondary domain name server address given by the DHCP server <first_address> <second_address>. Sets the ip address of the first (primary) Domain Server to 0.0.0.0 (default). ***Note:****Both valid first and second DNS addresses must be entered .*	*Main Menu >* *Configuration >* *Subsystem Profile >* *Router >* *DHCP Server >* *DHCP Dynamic Configuration.* Enter on a particular network (pool). (page 5-101)
`exit`	**Navigation command** that moves the user from the DHCP Configuration Mode to the Global Configuration Mode (Figure B–1 on page B-2).	(not applicable)
`network <first_address> <second_address> <netmask>` **"No"** prefix: **`no network <first ip>`**	Configures an address range for dynamic assignment (for the currently selected pool) by the integrated DHCP server. Different from Cisco CLI. ***Note:****Both the first and second IP addresses must be entered and a valid subnet mask for the network command.* Zeroes out the address range for the network with IP range starting with <first ip>.	*Main Menu >* *Configuration >* *Subsystem Profile >* *Router >* *DHCP Server >* *DHCP Dynamic Configuration.* Enter on a particular network (pool) (page 5-101)

Cross-Reference Information

Figure B-2 provides a cross-reference between CLI commands and the corresponding items in the Console Menus.

Figure B-2: *Cross-Reference for CLI Commands and Corresponding Console Menus*

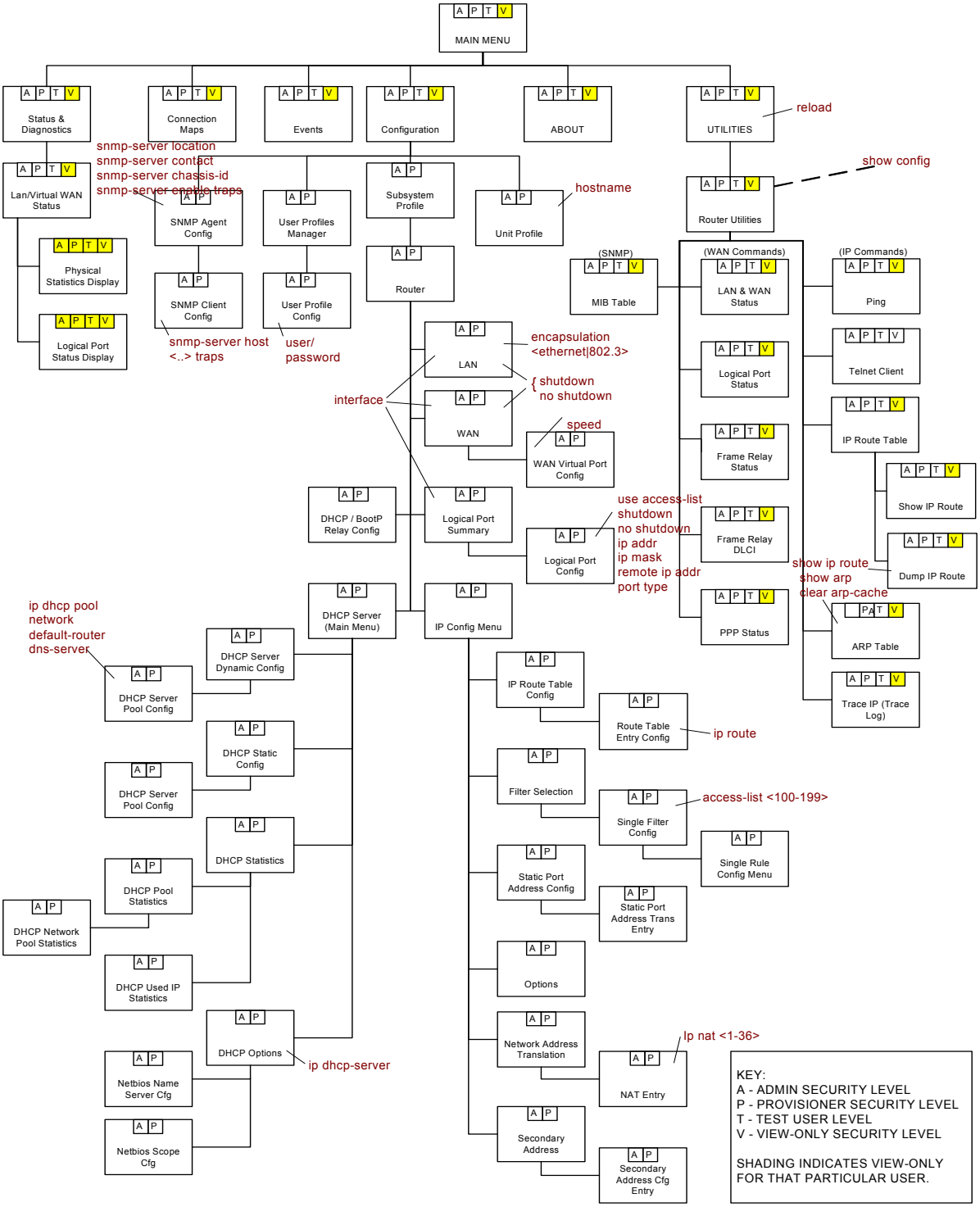

Glossary

The following glossary defines all technical words and phrases that are used in the *DNX-1u User's Guide*. Included are entries that are both unique to DNX-1u usage as well as common throughout the industry. *Italicized words* in definitions appear as a separate entry.

Numerics

1+1 APS (Automatic Protection Switching One-Plus-One Mode) - The T1 or E1 APS feature enables traffic on a failed T1 or E1 facility to be automatically moved to an alternate T1 or E1 facility and restores service automatically to the previously failed working facility when it is made good. Traffic is bridged onto both the working and protection links so that both links are carrying the same traffic. Each end independently determines which link is better based on certain link failure criteria. Therefore, there is no requirement for communication paths between the two termination points in order to complete a switchover. All T1 and E1 link types are supported. A connection is only allowed on the working link.

1:1 APS (Automatic Protection Switching One-for-One Mode) - The T1 or E1 Automatic Protection Switching (APS) feature enables traffic on a failed T1 or E1 facility to be automatically moved to an alternate T1 or E1 facility and restores service automatically to the previously failed working facility when it is made good. Communications between both ends of the link is done via the 4 kbps management channel (facility data link) over the protection link. There are line type limitations because of the FDL implications. A connection is allowed on the working link and protection link. Each end independently determines which link is better based upon certain link failure conditions. A decision to switch traffic to the alternate (protection) link is communicated to the far end device via the management channel, so both sides switch and stay in sync. Traffic on the protection channel will either be preempted or merged, depending upon the timeslot availability on the protected/working link.

A

AC - Alternating Current. The common form of electricity from power plant to home/office. Its direction is reversed 60 times per second in the U.S and 50 times in Europe.

ACA - see *Australian Communications Authority*.

ACTA - see *Administrative Council for Terminal Attachments*.

Adaptive Differential Pulse Coded Modulation - An ITU standard process in which analog voice signals are encoded into a digital form at 32 kbps (half the standard PCM rate).

Address Resolution Protocol (ARP) - An Internet protocol used to map physical (MAC) addresses to the IP addresses that are recognized in the local network. These addresses are dynamically discovered, and an ARP table is used to maintain the correlation between each IP address and its corresponding MAC address.

Admin - A DNX-1u operator with the highest security group level. Users at this level can access all DNX-1u functions and can add/remove users from the system. An Admin user is not able to view another user's password, but can delete and add new passwords in the event a user has forgotten his password.

Administrative Council for Terminal Attachments (ACTA) - A non-governmental telecommunications organization established to adopt technical criteria and to act as the clearinghouse, publishing technical criteria
for terminal equipment developed by ANSI-accredited standards development organizations. In addition, they also establish and maintain a registration database of equipment approved as compliant with the technical
criteria.

ADPCM - see *Adaptive Differential Pulse Coded Modulation*.

AIS - see *Alarm Indication Signal*.

Alarm - A *critical*, *major*, *minor*, or *info only* condition or state that relates to a DNX-1u subsystem.

Alarm Indication Signall - A signal transmitted instead of the normal signal to maintain transmission continuity and to indicate to the receiving terminal there is a transmission fault that is located either at, or upstream from the transmitting terminal.

Alternate Mark Inversion - A line encoding scheme for transmitting data bits over T1 transmission systems.

American National Standards Institute - This organization organizes committees, made up of computer users, manufacturers etc., to develop and publish industry standards.

American Wiring Gauge - A U.S. measurement standard of the diameter of non-ferrous wire, which includes copper and aluminum. The smaller the number, the thicker the wire. In general, the thicker the wire, the greater the current-carrying capacity and the longer the distance it can span.

AMI - see *Alternate Mark Inversion*.

AMP- Unit of electric current or the flow of electrons.

ANSI - see *American National Standards Institute*.

APS - see *Automatic Protection Switching*.

APS Threshold - A set of error conditions that must be met before a Working link is declared down and traffic is switched to a Protection Link.

ARP - see *Address Resolution Protocol*.

AS - Autonomous System.

ASCII (American Standard Code for Information Interchange) - An asynchronous signalling code with character framing. An ASCII character consists of a start bit, seven data bits, a parity bit (even if unused) and a stop bit. In some cases, 1-1/2 or 2 stop bits are used. Thus ASCII is at best 70% efficient with seven data bits out of every ten-bit character. Note that 1-1/2 stop bits can not be used if the data will be carried by modern-day modems. The parity bit is used as an eighth data bit with able characters from 128 to 256. ASCII data can also be transported synchronously (aka clocked

async). Also see *Parity* and *Asynchronous Transmission*.

Asynchronous Transmission - Asynchronous data transmission does not use clock signalling between the DTE and DCE. Characters are individually framed by start and stop bits. The most common async character code is *ASCII*. The signals have different frequencies and phase relationships. Individual characters contained in control bits (start and stop bits) designate the beginning and end of each character. Also see *ASCII* and *Modem*.

Audit Trail Event - The event of adding, deleting or changing any user's configuration is considered to be an audit trail event. An audit trail event message starts with the *audit trail identifier* of the initiating user, and then >> to indicate it is an audit trail message. Other user information, such as login or logout, is considered a regular event message. Since multiple logins of the same user are allowed, the login and logout event message includes the user name as well as total login number of that user.

Audit Trail Identifier - An ID of up to three alphanumeric characters which is used in the event log as a method to identify the user that initiated an audit trail event. The event of adding, deleting, or changing any user's configuration is considered to be an *Audit Trail Event*.

Australian Communications Authority (ACA) - Government regulating authority of radiocommunications and telecommunications for Australia.

Authentication String - The process of attempting to ensure the person using the computer system and performing tasks such as sending or receiving messages is one and the same as the person in whose name the account is registered. Networks require passwords as a method of authentication; however, passwords do not guarantee the person using the system is the person to whom the password was given.

Automatic Protection Switching (APS) - A redundancy feature that provides backup for the DNX-1u's T1/E1 Subsystem. It enables traffic on a failed T1 or E1 facility to be automatically moved to an alternate T1 or E1 facility.

Auto-MDIX - A type of Ethernet socket that automatically senses what sort of cable it has connected to it, and switches into the correct mode to work with the other end of the link. If either end of a link uses Auto-MDIX, then the link will work with either a straight-through or a cross-over cable.

AuToMu - Channel conversion from ITU's A-law PCM companding standard (used in Europe) to the Mu-law companding standard (used in North America and Pacific Rim).

AWG - see *American Wiring Gauge*.

B

B8ZS (Binary with 8 Zero Substitution) - Line code type, used on T1 and E1 circuits, in which a special code is substituted whenever eight consecutive zeros are sent over the link. Code is then interpreted at the remote end of the connection.

Backplane - An electronic circuit board containing circuitry and sockets into which additional electronic devices on other circuit boards or cards can be plugged. In the DNX-1u, the backplane also serves as the method of cross-connecting digital signals.

Backup - The process of saving a software file of the DNX-1u configuration database and connection maps.

BER - Bit Error Rate. Ratio of received bits that contain errors.

BERT - see *Bit Error Rate Test*.

BES - see *Bursty Errored Seconds*.

Bipolar Violations - Violations of the electrical characteristic denoting a circuit with both negative and positive polarity.

Bit Error Rate Test (BERT) - The ratio of the number of errored received bits divided by the total number of received bits from a known test pattern. Commonly used with a *loopback*.

Bit Rate - The speed at which bits are transmitted, usually expressed in bits per second (bps). The speed at which a point-to-point transmission line can convey data.

Bits per Second - The speed at which a point-to-point transmission line can convey data.

Boot Image - The initial machine-language boot-up file for the DNX-1u that is used in the initialization and powerup phase. This program determines the validity of the system images, loads the online image into dynamic memory, and starts the execution of the system software. It is also used to manage the system during an image switch.

bps - see *Bits per Second*.

BPV - see *Bipolar Violations*.

Broadcast Connection (BRC) - A cross-connection which transmits data from the declared source to the declared destination as a one-way connection.

Broadcast Master Connection (BRM) - A cross-connection that transmits data from a single declared source to a number of ports at once. Broadcast Master declares no initial destination, "listen" ports are declared after the broadcast master is defined. This is a half-duplex (one-way) connection. An example of this would be a stock "ticker tape" output being sent to multiple displays.

Bursty Errored Seconds - A one-second period in which more than one but less than 320 CRC6 errors has occurred is known as a bursty errored second.

C

Canadian Standards Association (CSA) - Canadian agency that certifies products that conform to Canadian national safety standards.

Carrier Fault Alarm - see *Red Alarm*.

CAS - see *E1 CAS*.

CCITT - Consultative Committee for International Telephony and Telegraphy. A standards organization that devises and proposes recommendations for international communications. Also see *American National Standards Institute (ANSI)*.

CE - see *Connection Endpoint*.

CEFS - see *Consecutive Error-Free Seconds*.

Challenge Handshake Authentication Protocol (CHAP) - A type of authentication protocol in which the authentication agent sends the client program a key to be used to encrypt the user name and password. CHAP doesn't only require the client to authenticate itself at startup time, but sends challenges at regular intervals to make sure the client hasn't been replaced by an intruder, for instance by switching phone lines. Also see *Password Authentication Protocol (PAP)*.

Channel Service Unit - A digital interface device that connects end-user equipment to the local digital telephone loop.

CHAP - see *Challenge Handshake Authentication Protocol.*

Clear Connection - A *connection* that passes all timeslots of a *T1* or *E1* link including the Framing Bit. A clear *T1* connection uses 25 timeslots (1 Framing + 24 Payload) of cross-connect capacity. A clear *E1* connection uses 32 timeslots (1 Framing + 31 Payload/Signalling).

Clear to Send (CTS) - Defined in the EIA/TIA-232 specification as a circuit that is activated when DCE is ready to accept data from a DTE.

Client - A device, such as a PC, that requests information or initiates commands to a *server*.

CLI - see *Command Line Interface*.

CLLI - see *Common Language Location Identifier*.

Clocking - An oscillator-generated signal that provides a timing reference for a trans-

mission link to control the timing of certain functions, such as generating periodic signals for synchronization and a time base.

Cold Reset - Method of restarting the entire DNX-1u, including resetting the framers and downloading the *FPGA* software. It causes the DNX-1u to initialize to its power-up configuration, and during this boot-up cycle, no user data will flow.

Command Line Interface - An interface that allows you to interact with the BSG-1u through a series of commands and optional arguments.

Common Language Location Identifier (CLLI) - An 11-digit code that allows the phone company to perform trap and trace functions.

Connection - A mapping between two channels or paths within a network device.

Connection Endpoint (CE) - A terminator at one end of a layer connection with a Service Access Point (SAP).

Connection Map - A set of *DNX-1u cross*-connection properties.

Consecutive Error-Free Seconds (CEFS) - The number of consecutive one-second periods in which there were no defects or errors on the link.

CPE - Customer Premises Equipment. Equipment, such as terminals and modems, supplied by the telephone company, that is installed at customer sites and connected to the telephone company network.

CRC - Cyclic Redundancy Check. A method of checking for errors in data that has been transmitted on a communications link. The dividend polynomial is initially preset to 0, and the 1s and 0s of the data stream become the coefficients of the dividend polynomial. The division uses subtraction modulo 2 (no carries), and the remainder is transmitted as the error check field. The receiving station compares the transmitted remainder with its own computed remainder, and an equal condition indicates that no error has occurred. The polynomial value depends on the protocol and code set being used.

Critical Alarm - Highest alarm severity level; generated at the device level. Typically system-level fault likely to impact multiple ports/links; a critical alarm can cause switchover if APS is active.

CSA - see *Canadian Standards Association*.

CSU- Channel Service Unit

CTS - see *Clear to Send*.

D

D4 (Super Frame) - A common framing type used on T1 circuits; also known as SuperFrame. It consists of 12 frames of 193 bits each for a total of 2316 bits. Each 193 bit frame consists of 192 bits preceded by one framing bit (the F bit).

Digital Access and Crossconnect System (DACS) - A digital switching device in telecommunications providing automatic cross-connection of a digital signal or its constituent.

Database - A storage place for data similar to a data file in which related pieces of data are grouped together in a single structure (record) with relationships defined between them in order to provide a higher degree of organization. The DNX-1u database contains all configuration and cross-connection files.

Data Carrier Detect (DCD) - An RS-232 signal used to indicate that a good carrier is being received from a remote Data Set, such as a modem or DSU/CSU.

Data Communications Equipment (DCE) - Device and connections of a communications network that comprise the network end of the user-to-network interface. It provides physical connection to the network, forwards traffic and provides clocking signals used to synchronize data transmission between DTE devices and itself.

Data Link Control Identifier (DLCI) - The number of a private or switched virtual circuit in a frame relay network. Located in the frame header, the DLCI field identifies which logical circuit the data travels over, and each DLCI has a committed information rate (CIR) associated with it. The DLCI number is local to the frame access device and frame relay switch it connects to, and it is generally changed by the switch within the network, because the receiving switch uses a different DLCI for the same connection.

Data Set Ready (DSR) - An RS-232 signal sent from a Data Set, such as a modem or DSU/CSU, to indicate that it is on and able to accept data. Contrast with *DTR*.

Data Terminal Ready (DTR) - An RS-232 signal sent from a computer or terminal to a Data Set, such as a modem or DSU/CSU, to indicate that it is on and able to accept data. Contrast with *DSR*.

DB Connector - A family of plugs and sockets widely used in communications and computer devices. DB connectors come in 9, 15, 25, 37 and 50-pin sizes. The DB connector defines the physical structure of the connector, not the purpose of each line.

DC - Direct Current. An electrical current that travels in one direction and used within the computer's electronic circuits.

DCE - see *Data Communications Equipment*.

DCD - see *Data Carrier Detect*.

DHCP - Dynamic Host Configuration Protocol. A protocol that allocates dynamic IP addresses to client stations logging onto a TCP/IP network, so that addresses can be reused when hosts no longer need them. Eliminates having to manually assign permanent IP addresses. This allows a larger group of stations to share a limited pool of addresses.

Diagnostics - Procedures initiated from or to the DNX-1u that can be used to identify the location of a problem.

DLCI - see *Data Link Control Identifier*.

DNS - Domain Name System. The manner in which the Internet locates and translates domain names into IP addresses.

DNX - Sycamore Network's family of multiservice access concentration platforms that provide solutions for the access network needs of wireless and wireline service providers.

DNX-11 - Sycamore Network's 11-slot *DNX* Multiservice Access Concentrator.

DNX-1u - Sycamore Network's single-slot *DNX* Access Gateway.

DNX-4 - Sycamore Network's four-slot *DNX* Multiservice Access Concentrator.

DNX-88 - Sycamore Network's 88-slot (i.e., eight-unit) *DNX* Multiservice Access Concentrator.

DS0 - Digital Signal Level 0. The base for the digital signal X series; transmits digital signals over a single channel at 64 kbps.

DS1 - Digital Signal Level 1. Framing specification used in transmitting digital signals at 1.544 Mbps on a T1 facility (United States) or at 2.108 Mbps on an E1 facility (Europe).

DSR - see *Data Set Ready*.

DTE - Data Terminal Equipment. A device at the user end of a user-network interface that serves as a data source, destination, or both. It connects to a data network through a DCE device, such as a modem, and typically uses clocking signals generated by the DCE. It includes devices such as computers, protocol translators and multiplexers.

DTR - see *Data Terminal Ready*.

E

E1 - A digital transmission link with a capacity of 2.048 Mbps, used predominantly in Europe. E1 is channelized into 32 64-kbps

channels, each capable of carrying a single voice conversation or data stream.

E1 CAS - A link that performs at a 2.048-Mbps capacity with 32, 64-kbps channels, using two separate supervisory channels for framing and signalling, reducing the data-bearing capacity to 30 channels.

E1 Clear - An E1 link type that performs at a 2.048-Mbps capacity with 32, 64-kbps channels with no supervisory channels.

EIA - Electronic Industries Association. A membership organization that sets standards for consumer products and electronic components.

EIA-232 - Electrical signalling specification developed by Electronic Industries Association (EIA) which supports unbalanced circuits at signal speeds of up to 64 kbps. Formerly known as *RS-232*. The DNX-1u supports EIA-232 on the HSSD Subsystem's DB26F connector via industry-standard pin assignments.

EIA-530 - Electrical signalling specification developed by Electronic Industries Association (EIA) which refers to two electrical implementations of EIA/TIA-449: RS-422 (for balanced transmission) and RS-423 (for unbalanced transmission). Now referred to collectively as EIA-530.

EIA-530A - Electrical signalling specification developed by Electronic Industries Association (EIA) which supports unbalanced circuits at signal speeds of up to 64 kbps. Formerly known as RS-232.

EIA-422 - Electrical signalling specification developed by Electronic Industries Association (EIA) which supports balanced electrical implementation of EIA/TIA-449 for high-speed data transmission. Formerly known as RS-422.

Element Management System EMS) - A System which is responsible for managing one or more of a specific type of telecommunications network element (NE). Typically, an EMS manages the functions and capabilities within each NE but does not manage the traffic between different NEs in the network.

EMS - see *Element Management System*.

Encapsulation - The process by which each protocol adds header information to a datagram. The header information included information regarding the source, destination and route of the message.

ENvision - Sycamore Network's SNMP-based Element Management System used for monitoring and controlling DNX-1u *networks*. It provides fault, configuration, and performance management, including graphical device configuration/statistics/diagnosis, a system-wide view of the network, alarm monitoring and indication, advanced network mapping, and powerful reporting.

ENvision Plus - Sycamore Network's Network Management System used for monitoring and controlling DNX-1u *networks*. ENvision Plus provides fault, configuration, and performance management, including graphical device configuration/statistics/diagnosis, a system-wide view of the network, alarm monitoring and indication, advanced network mapping, and powerful reporting. It also provides an improved fault management paradigm, POINT-AND-CLICK connection provisioning, automatic connection re-routing around faults, a highly available architecture, and a powerful network design and planning tool.

Errored Seconds (ES)- The occurrence of a Loss of Frame, CRC6, or CRC4 error in a one-second period is known as an errored second.

ESD - Electrostatic Discharge.

ESF - Extended Superframe. A framing format for T1 applications that consists of twenty four frames of 192 bits each with the 193rd bit providing timing and other functions. It includes provisions for continuous monitoring by both the user and the telephone company central office. ESF provides a 4 kbps link control channel (transparent to user data) which allows the telephone company to monitor the local loop, transmit and receive test messages and retrieve performance data, all without interrupting normal operations.

ETSC- see *European Telecommunications Standards Institute*.

Ethernet - The most widely-used standard for local area networks (LANs).

European Telecommunications Standards Institute (ETSI)- The European counterpart to ANSI.

Event - A momentary operational condition or abnormality, which may or may not require operator intervention. Events set and clear *alarms*.

F

Failed Second (FS) - A one-second period during the occurrence of a Failed Signal State (ten consecutive errored seconds).

FCC - see *Federal Communications Commission*.

Feature Option Key - A Character string which is entered into the DNX-1u system to activate one of the optional features.

Federal Communications Commission (FCC) - United States government agency that supervises, licenses and controls electronic and electromagnetic transmission standards.

FIFO- see *First In First Out*.

File Transfer Protocol (FTP) - Application protocol used for transferring files between network nodes.

First in First Out (FIFO)- A buffering scheme where the first byte of data that enters the buffer is the first byte retrieved.

Force Protection Online (FPO) - An APS-related command that forces an immediate switchover from the Protection Link to the Working Link.

Force Working Online (FWO) - An APS-related command that forces an immediate switchover from the Working Link to the Protection Link.

FPGA - Field Programmable Gate Array. A programmable logic chip in a high density of gates. There are a variety of FPGA architectures including programmable logic blocks, programmable interconnects and switches between the blocks.

FPO - see *Force Protection Online*.

Frame - At the data link layer in a point-to-point transmission line, the technique used to demarcate the data so that it can be received in an orderly and meaningful way.

Frame Relay - At the data link layer in a wide area network (WAN), a protocol for transferring packets at speeds up to 1.544 Mbps, depending on the physical medium being used. Frame Relay is designed for noise-free digital lines, and therefore omits the error correction facilities. The result is increased bandwidth.

FS - see *Failed Second*.

FTP - see *File Transfer Protocol*.

Full Duplex - The ability of a data processing device or protocol to simultaneously transmit and receive data.

Full Duplex Connection (FDX) - A cross-connection which transmits and receives data to/from a declared destination as a two-way connection.

FWO - see *Force Working Online*.

G

G.826 - An ITU-T standard which defines error performance parameters and objectives for international digital paths which operate at or above the primary rate.

GET - An SNMP network management command that requests information from a managed device. Also see *SET*.

H

HAC - see *High Availability Circuit*.

Half Duplex - A channel or device which can communicate in both directions, but not simultaneously.

HALT - see *Highly Accelerated Life Testing.*

HDLC - High-Level Data Link Control. A bit-oriented synchronous data link layer protocol derived from SDLC and HDLC that specifies a data encapsulation method on synchronous serial links using frame characters and checksums.

High Availability Circuit (HAC) - An optional, customer-specific T1 1+1 High Availability Circuits Protection feature allows any of the eight T1 ports to be configured for High Availability Circuit use or Standard Availability Circuit use when in 1-1 cross-connect mode. A High Availability Circuit is monitored and will be switched over to the backup path in the event of a line fault.

Highly Accelerated Life Testing (HALT) - A process developed to uncover design defects and weaknesses in electronic and mechanical assemblies. HALT subjects a product to stresses far exceeding those intended in its field application. Stresses of temperature, rapid thermal cycle, and vibration (multi-axis) are used to rapidly facilitate and discover design weaknesses and manufacturing problems at an early stage in product development.

Hop - An address through which an IP frame is forwarded. Sometimes it takes several hops for a frame to reach its destination.

Host - A computer that can function as the endpoint of a data transfer. The computer can be a single-user personal computer or workstation that is part of a local area network (LAN), a minicomputer, or a mainframe computer.

HSSD - Acronym used to identify the DNX-1u's High Speed Synchronous Data Subsystem.

I

IC - Integrated Circuit. An integrated circuit (IC), sometimes called a chip or microchip, is a semiconductor wafer on which thousands or millions of tiny resistors, capacitors, and transistors are fabricated. An IC can function as an amplifier, oscillator, timer, counter, computer memory, or microprocessor. A particular IC is categorized as either linear (analog) or digital, depending on its intended application.

ICEA- Insulated Cable Engineers Association (ICEA)

ICMP - see *Internet Control Message Protocol*.

In Service - A service state, set by either the operator or the system, that shows the indicated link is fully operational.

Info Only - Lowest alert severity level; provided as a status indicator; non-alarm level.

Internet Control Message Protocol (ICMP) - An IP-supported protocol that provides a number of diagnostic functions, such as Ping. It is used between a host server and a gateway to the Internet to send message control and error-reporting messages.

Internet Protocol (IP) - The method by which data is sent from one computer to another on the Internet. It is a connectionless protocol, meaning there is no established connection between the two computers. Data is sent as independent packets, also known as data units or data grams, which are contained in the IP address, a 32-bit number that identifies each sender or receiver of information. When the packets are received, they are put into the correct order by the Transmission Control Protocol (TCP).

IP - see *Internet Protocol*.

ITU-T (International Telecommunication Union - Telecom) - International body that develops worldwide standards for telecommunications technologies.

ITU-V.35 - ITU-T Electrical signalling standard describes a synchronous, physical layer protocol used for communications between a network access device and a packet network. The DNX-1u Test Access Module supports V.35 per industry standards. V.35 is most commonly used in the United States and in Europe, and is recommended for speeds up to 48 kbps. The DNX-1u supports V.35 on the HSSD Subsystem's DB26F connector.

ITU-V.54 - an ITU standard for various loopback tests that can be incorporated into modems for testing the telephone circuit and isolating transmission problems. Operating modes include local and remote digital loopback and remote analog loopback.

ITU-X.21 - ITU-T Electrical signalling standard for serial communications over synchronous digital lines. The X.21 protocol is used primarily in Europe and Japan. The DNX-1u supports X.21 on the HSSD Subsystem's DB26F connector.

K

kbps - Kilobits per second or one thousand bits per second.

L

LAN - see *Local Area Network*.

LAPB - see *Link Access Procedure Balanced*.

LCN- Local Channel Number

LED - Light Emitting Diode. A display technology that uses a semiconductor diode that emits light when charged.

Line Build Out - A line attenuation level for T1 circuits.

Link Access Procedure Balanced - The most common data-link control protocol used to interface with X.25 DTEs.

Link State Advertisement - A broadcast packet used by link-state protocols that contains information about neighbors and path costs. LSAs are used by the receiving routers to maintain their routing tables. Sometimes called a Link State Packet (LSP).

Link State Packet - A packet of information generated by a network router in a link state routing protocol that lists the router's neighbors.

Listen-Source Connection (L-SRC) - A cross-connection which monitors the source of any configured connection. This is a non-disruptive half-duplex (one-way) connection.

Listen-Destination Connection (L-DEST) - A cross-connection which monitors the destination of any configured connection. This is a non-disruptive, half-duplex (one-way) connection that is only meaningful when listening to a full-duplex connection.

Local Area Network (LAN) - A limited distance data communications network (typically a building or campus) that links computers with shared peripherals, such as printers and servers. Linked by cables such as coaxial cables or twisted pair, the computers connected to the LAN can access resources on other computers and shared peripheral devices.

LOF - see *Loss of Frame*.

Login - A valid USER ID and password must be entered before the DNX-1u will allow a log in.

Loopback - A method of checking the accuracy of data transmission in which the transmitted data stream is returned, or looped back, to its source for comparison with the original data. Loopbacks can be performed on data in an analog or digital state. Commonly used in conjunction with a *BERT*.

Loss of Frame (LOF) - A condition that is declared on network devices or software which indicates that one or more network frame did not get through the networking device. LOF is a generic term with various definitions depending on the signal standards domain in which it is being used.

Loss of Signal (LOS)- A condition that is declared on network devices or software that indicates a loss of signal on the receiving side.

LSA- see *Link State Advertisement*.

LSAD - Acronym used to identify the DNX-1u's Low Speed Asynchronous Data Subsystem.

M

MAC Header - In the Open Systems Interconnection (OSI) Reference Model, a sublayer that was added between the physical layer and the data link layer; this sublayer describes the protocols for broadcast networks, such as LANs.

Major Alarm - Second highest *alarm* severity level; generated mostly at the port level. Typically individual port-level fault likely to impact a given port.

Management Information Base (MIB) - A database of network management information that lists the logical names of network resources which are pertinent to the network's management and can be managed using the Simple Network Management Protocol (SNMP).

Mbps - Megabits per second or one million bits per second.

MIB - see *Management Information Base.*

Minor Alarm - Third highest *alarm* severity level; typically reserved for informational non-disruptive status alerts.

MLP - Multilink Point-to-Point Protocol. A Method of splitting, recombining, and sequencing datagrams across multiple logical data links.

N

NAT - see *Network Address Translation*.

NE - see *Network Element.*

Network - A complex interconnected system of electronic equipment which transmits any combination of voice, video and/or data between users over a transmission medium such as copper wire or fiber optics.

Network Address Translation (NAT) - A method for translating internal IP addresses or network addresses into a single globally unique IP address. It permits a nearly unlimited number of users of one class C Network address because global addresses are required only when a user is connected to the Internet. It also serves as a fire wall by keeping individual IP addresses hid-den from the outside world. NAT is configured by defining address pools and specifying whether a port is “Inside” or “Outside”. Also see *IP*.

Network Element - A combination hardware and software system that is designed to perform a telecommunications service function which provides support or services to a user.

Network Management System (NMS) - System which is responsible for managing at least part of an entire network. Typically an NMS runs on a reasonably powerful computer, such as an engineering workstation. An NMS manages the functions, resources, and capabilities within the network, manages traffic, and helps keep track of network statistics.

Network Operations Center (NOC) - A central location that performs status monitoring, accumulation of statistics and preventive and corrective maintenance on a corporate network.

Nibble - A four-bit (32 kbps) portion of an eight bit (64 kbps) timeslot. The two portions of the timeslot are known as the “High” and “Low” Nibble.

Nibble Switching - see *Subrate Switching*.

NMS - see *Network Management System*.

NOC - see *Network Operations Center*.

O

OOF - see *Out of Frame*.

OOS - see *Out of Service*.

Open Shortest Path First - A link-state routing protocol that calls for the sending of LSAs to all other routers within the same hierarchical area. As OSPF routers accumulate link-state information, they use the SPF algorithm to calculate the shortest path to each node. As a link-state routing protocol, OSPF contrasts with RIP and IGRP, which are distance-vector routing protocols. Routers running the distance-vector algorithm send all or a portion of their routing tables in routing-update messages to their neighbors.

OSPF - see *Open Shortest Path First.*

Out of Frame (OOF) - Condition where frame alignment has been lost.

Out of Service - An operating condition, set by either the operator or the system, that shows the indicated component is not operational.

Overhead - Framing, error control, addressing, idle code, or any other characters or bit sequences in a data transmission other than actual end-user data.

P

Packet - Also known as a data unit or a datagram. A physical unit of data that has been broken down to a small enough size so that it can be transmitted efficiently and rapidly across the network.

Packet Internet Groper (Ping) - A network troubleshooting tool that consists of sending an *ICMP* echo request and waiting for a reply, which indicates the operability of the “pinged” device and intervening network.

PAP - see *Password Authentication Protocol*.

Parity - A character-level error-control mechanism used with asynchronous signalling codes. A parity bit is set to either a “one” (mark) or a “zero” (space) to ensure the total quantity of “ones” within a character are either odd (odd parity) or even (even parity). Start and stop bits are excluded from the parity calculation. Character-level error-control has not been successful, and today, parity is rarely used. Asynchronous hardware, however, requires the parity bit be present (usually forced to “one”) even if unused. Also see *ASCII*.

Password Authentication Protocol (PAP) - The most basic form of authentication for logging into a network. A user’s name and password are transmitted over a network and compared to a table of name-password pairs. Typically, the passwords stored in the table are encrypted. Also see *CHAP*.

PCM - see *Pulse Code Modulation*.

PDU - see *Protocol Data Unit*.

Ping - see *Packet Internet Groper*.

Point-to-Point Protocol (PPP) - Successor to *SLIP* which provides router-to-router and host-to-network connections over synchronous and asynchronous circuits. PPP supports PAP, *CHAP* and other authentication protocols as well as compression and encryption. Whereas *SLIP* was designed to work with *IP*, *PPP* was designed to work with several network layer protocols, such as *IP* and IPX.

Polling - Interrogation of devices to help avoid contention, determine operational status, or to determine readiness to send or receive data.

Port - The physical connector and supportive circuitry that connects the DNX-1u to a communications medium.

PPP - see *Point-to-Point Protocol*.

Protection Link - Backup link which will be switched to in the event of a failure of the *Working Link*.

Protocol - A set of rules controlling the orderly exchange of information between stations in data communications networks or systems. Specific protocols apply to each layer in a network’s architecture.

Protocol Data Unit (PDU) - Also known as *Packet*. The technical name of a frame of data transmitted over the data link layer (layer 2) in a communications network. A unit of data that has been broken down into a small enough size so the Internet Protocol can handle it and the Internet transport it.

Provision - A DNX-1u operator with the second highest *security* level. A Provisioner can create and delete *connections,* make configuration changes, run diagnostic tests, and do everything that an Administrator can

do ***except*** add/delete users, change passwords, or download software.

Pulse Code Modulation (PCM) - Transmission of analog information in digital form through sampling and encoding the samples with a fixed number of bits.

Q

Quad T1/E1 - DNX-1u compatible printed circuit module that interfaces the *DNX-1u* node with up to four *T1* or *E1* ports. A DNX-1u can contain two Quad T1/E1 Modules.

QRSS- A derivative of the CW Q-Signal QRS for "please lower your code speed". By using extremely slow CW, it is possible to use a computer sound card and special software to extract CW characters from below the audible noise floor. Amateur VLF operators have used QRSS techniques to span the Atlantic at 136 KHz and to receive very weak VLF beacon transmissions from distant locations. By adopting these same techniques, operators can push the envelope of very low power HF communications.

R

RADIUS (Remote Authentication Dial-In User Service) - A client-server protocol that provides a centralized method for authentication, accounting, and security. It allows network administrators to configure usernames and passwords in one central location for all equipment in the network, instead of on each individual piece of equipment in the network. RADIUS also provides accounting features.

Red Alarm - A network alarm which is generated when an out-of-frame condition has been present for 2.55 sec(± 40 ms). Also known as *Carrier Fault Alarm*.

Redundant Link - Also known as a Protection Link, it is a link that has been configured to replace or substitute for a failed Working Link.

Refresh - The redisplay of a window with the latest information.

Restore - The process of retrieving the DNX-1u system configuration database from a previously saved backup file.

Revertive Switching - APS function where an active Protection Link will switch back (revert) to the Working Link should the Working Link become operational once again. Revertive switchover to the Working Link will only occur when Revertive Mode has been enabled and the revertive threshold criteria have been met.

Revertive Threshold - When a Protection Link is active and a Working Link comes back online, this is a set of conditions that must be met before the Protection Link is switched back to the Working Link.

RFC (Request for Comments) - The document series maintained by the Internet community that records the protocols within the Internet and gives other information.

RIP - see *Routing Information Protocol*.

Router - 1. An electronic device that connects a LAN to a WAN and handles the task of routing messages between the two networks. 2. The DNX-1u's Router Subsystem.

Routing Information Protocol (RIP) - A simple routing protocol that is part of the TCP/IP protocol suite. It determines a route based on the smallest hop count between source and destination. RIP is a distance vector protocol that routinely broadcasts routing information to its neighboring routers and is known to waste bandwidth.

S

Security Level - One of four privilege levels (*Admin*, *Provision*, *Test* and *View Only*) that are assigned to each DNX-1u user.

SEF - see *Severely Errored Frames.*

Serial Line Internet Protocol (SLIP) - A serial protocol used for providing communication between a remote user and a TCP/IP Network. Commonly used to provide dial-up or private line access to the Internet. Also see *PPP*.

Server - A computer that is set aside to respond to commands from *clients*.

Service - The provision of telecommunications to customers by a common carrier, administration, or private operating agency, using voice, data, and/or video technologies.

SES - see *Severely Errored Seconds*.

SET - A SNMP network management command that invokes an operational condition upon managed device. Also see *GET*.

Severely Errored Frame (SEF) - A Severely Errored Frame is reported when the received signal does not meet requirements of ANSI T1.231.

Severely Errored Second (SES) - A one-second period in which 320 or more CRC6 errors have occurred.

Signalling - Communications between switches to set up and terminate calls.

SLIP - see *Serial Line Internet Protocol*.

Slot - A location for a printed circuit module in a DNX-1u. There are slots provided for two Quad T1/E1 Modules and two Power Supply Modules.

Simple Network Management Protocol (SNMP) - Network management protocol used in TCP/IP networks. SNMP monitors and controls network devices, and manages configurations, statistics collection, performance and security. It is the most common method by which element management and network management applications, such as ENvision or ENvision Plus, can query a management agent. SNMP maintains a Management Information Base (MIB) that contains information regarding the device's status and configuration settings.

Stratum 4 Timing- A timing source that provides a start end point for transmissions. This timing source has no holdover capability and is free running within adjustment time limits.

Subchannel Connection (SUBCH) - A cross-connection which used for the 2 or 4 bit switching without the compression and decompression. Allows the user to map 2 or 4 bits worth of data from one link to another based on the size of the selected bit group. The number of bits used will be previously selected via the Transcoder Configuration Menu.

Subrate Switching - A method in which data is transmitted and received data on a 32 kbps portion of a 64 kbps timeslot (DS0), which in turn allows cross connection of each half of a timeslot to two different destination half-timeslots. Sometimes referred to as *Nibble Switching*.

Subrate Switching Connection (SUBSW) - A cross-connection which transmits and receives data on a 32 kbps portion of a 64 kbps timeslot (DS0), which in turn allows cross connection of each half of a timeslot to two different destination half-timeslots.

Switchover - an action that occurs when a *Protection Link* replaces a *Working Link* that has failed.

Synchronous - Communications in which the timing is achieved by sharing a single clock. Each end of the transmission synchronizes itself with the use of the clocks and information sent along with the transmitted data. Synchronous data does not use stop/start character framing. Instead, a large group of contiguous characters is framed by a start-bit sequence and an end-bit sequence.

Syslog - see *System Log*.

sysname - A MIB variable which is set at the DNX-1u's System domain name field in the SNMP Agent Configuration Menu. For the DNX-1u, it has a maximum length of 50 ASCII characters.

System Image - The executable program file used to operate the DNX-1u. The system uses two program images: the online program image, and an offline image.

System Log (syslog) - A record of activity that is maintained by every DNX-1u element, which sends its syslog to a syslog server for centralized display.

System Manager - All of the subsystems in the DNX-1u chassis are under the control of the DNX-1u system manager.

T

T1 - A high-bandwidth telephone trunk line with a capacity of 1.544 Mbps, used in North America. T1 is channelized into 24 64-kbps DS0s, each capable of carrying a single voice conversation or data stream. The DS0s use in-band signalling, thereby reducing the data-bearing capacity of each channel to 56 kbps.

T1 Clear - The T1 Clear link type performs at a 1.544-Mbps capacity with 24, 64-kbps channels without in-band signalling.

TCP - see *Transmission Control Protocol*.

TDM - see *Time Division Multiplexin*g.

Terminal Access Controller Access Control System (TACACS+)- A client-server protocol which provides a centralized method for authentication, accounting, and security. It allows network administrators to configure usernames and passwords in one central location for all equipment in the network, instead of on each individual piece of equipment in the network. RADIUS also provides accounting features.

Telnet - An application level protocol used to remotely log into Internet computers that support multiple terminal sessions. Also used by many devices for remote configuration.

Terminal-Server Protocol - A protocol for asynchronous serial interfaces. Provides Telnet sessions to an external device.

Test - A DNX-1u operator with the third highest *security level*. A Tester can perform diagnostic testing on various elements, but cannot set element properties. Users at this level have all of the privileges of a *View Only* user, plus the ability to initiate and terminate BERT tests and loopbacks as well as clear performance registers.

TFTP - see *Trivial File Transfer Protocol*.

Time Division Multiplexing (TDM) - A technology that transmits multiple signals simultaneously over a single transmission path. Each lower-speed signal is time sliced into one high-speed transmission.

Transcoder - Optional DNX-1u functionality which is used to support applications that require the use of voice compression or subchannels. Up to 32 DS0s may be steered to the transcoder block. The incoming DS0s are compressed to 32 kbps (8 bits compressed to 4 bits or 2:1).

Transmission - The signalling of data over telecommunications channels.

Transmission Control Protocol (TCP) - A connection-oriented transport layer protocol that provides reliable full-duplex data transmission. Before sending data, TCP breaks it down into datagrams, which are then routed through the network by the IP protocol. Some of the datagrams may travel different paths or suffer delays en route. TCP tells the destination node how to reassemble the datagrams in the correct order.

Transparent Protocol - - A protocol used to pass data, regardless of the format. Essentially, everything is passed unchanged, without the addition of control signals.

Trap - An unsolicited *SNMP* message sent by an agent to a manager to indicate the occurrence of a significant event, such as a specifically defined condition or that a threshold was reached.

Trivial File Transfer Protocol (TFTP) - A network application that is simpler than the *File Transfer Protocol* (FTP) but less capable. Transfers files without password protection and user-directory capability.

Trunk - The individual physical transport medium that connects two network elements.

U

UDP - see *User Datagram Protocol*.

UL - see Underwriter's Laboratories.

Underwriter's Laboratories (UL) - Independent agency within the United States that tests product safety.

UNI - User Network Interface.

Unprotected - A primary link that is not backed up by a redundant link should a failure occur.

User Datagram Protocol (UDP) - A connectionless, communication transport method that offers a limited amount of service when messages are exchanged over the Internet Protocol. It is an alternative to *TCP*. Unlike *TCP*, UDP does not acknowledge or guarantee delivery, nor does it provide sequencing of packets.

V

V.35 - see *ITU-V.35*.

V.54 - see *ITU-V.35*.

View-only - A DNX-1u operator with the lowest *security level*. Users at this level can view settings, options, and alarm information but cannot change anything.

Voice Compression Connection (VCMP) - A cross-connection which transmits and receives voice data between the uncompressed source and the compressed destination link. The compression ratio is 2:1.

Volt- A unit of electrical potential difference or electomotive force.

VT-100 - A commonly used non-intelligent terminal or terminal emulation mode used for asynchronous communications.

W

WAN - see *Wide Area Network*.

Warm Reset - Method of restarting the DNX-1u which does not reset framers or download FPGA software. It causes the DNX-1u to initialize to its power-up configuration, and during this boot-up cycle, no user data will flow.

Waste Electrical and Electronic Equipment Directive - The European Community directive 2002/96/EC on waste electrical and electronic equipment which, together with the RoHS Directive 2002/95/EC, became European Law in February 2003, setting collection, recycling and recovery targets for all types of electrical goods. This directive obliged the 25 EU member states to transpose its provisions into national law by 13 August 2004. The WEEE directive varies between the member states, a patchwork of requirements and compliance solutions is emerging across Europe.

Watt- - An International System unit of power equal to one joule per second. It is the product of current and voltage or the current squared resistance.

WEEE - see *Waste Electrical and Electronic Equipment Directive*.

Wide Area Network (WAN) - A communications network that is capable of spanning a geographic area larger than a metropolitan area.

Working Link - A primary link that will be replaced by the a *Protection Link* should a failure occur.

Workstation - A computer that is connected to a network. A workstation has its own processor, processes applications locally and may access data and resources located elsewhere on the network.

Index

T

U

V

W

X

THIS PAGE INTENTIONALLY LEFT BLANK.

THIS PAGE INTENTIONALLY LEFT BLANK.

220 Mill Road Chelmsford, MA 01824-4144
Telephone: 978-250-2900
Fax: 978-250-3550
Web site: http://www.sycamorenet.com